MASTER BOOK

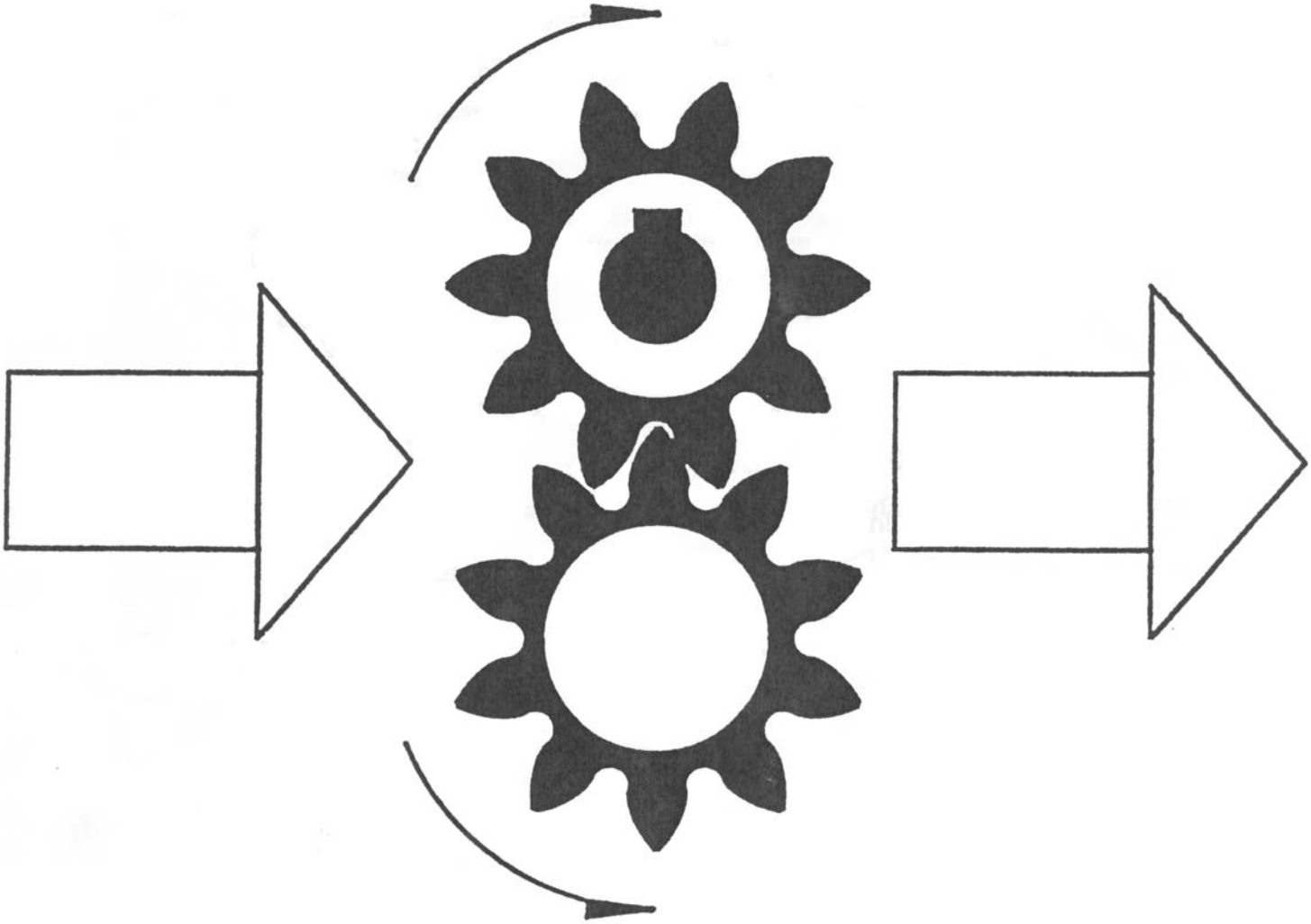

11TH EDITION
SEPTEMBER 20, 2005

COPYRIGHT 2005
ALL RIGHTS RESERVED
CONFIDENTIAL

Table of Contents

Index .....Chapter 1

Permco History Training Guide Pages 5 thru 7
Presentation Outline Training Guide Page 8
Suggested Marketing Plan Page 9
10 Good Reasons Page 10
Unit Return Policy Page 11
Warranty Policy Pages 12-13

Dump Pumps .....Chapter 2

Remote Mount Parts Breakdown Page 14
Direct Mount Parts Breakdown Page 15
Remote Mount Parts List Page 16
Direct Mount Parts List Page 17
Two to Three Line Description Pages 18 & 19
Two to Three Line Procedures Page 20
Two and Three Line Schematic Page 21
Relief Valve Drawing Page 22
Load Check Drawing Page 23
Changing Rotation of Direct Mount Pump Page 24
OE Air Shift Page 25
Aftermarket Air Shift (997-00971A) Pages 26 & 27
Dump Pump Cross Over Numbers Pages 28-30
300 & 400 Series Parts Breakdown Page 31
300 & 400 Remote Mount Parts List Page 32
300 & 400 Direct Mount Parts List Page 33
300 & 400 Air Shift Pages 34 thru 36
300 & 400 Series Cross Over Numbers Page 37-38
Gemini Adjusting Dual Pressure Relief Page 39
Gemini Console Operation 997-01226-8 Page 40
Gemini Console Installation Diagram Page 41
Gemini Relief Air Cylinder Parts List Page 42
Gemini Relief Valve Parts List Page 43
Gemini Console Operation 997-01444 Pages 44 & 45
Gemini Console Operation PAVC-295-HP-13 Pages 46-47
Gemini Plumbing Schematic Page 48

Inline Relief Valves.....Chapter 3

Inline Reliefs Page 49

Dry Valve.....Chapter 4

Operation of the Dry Valve Page 50
Dry Valve Port End Covers Page 51
Dry Valve By-Pass Control Page 52
Shaft End Cover Seal Arrangements Page 53
Dry Valve Thrust Plates Page 54
Dry Valve Thrust Plate Seals Page 55
Unloader Thrust Plates Page 56
Muncie Dry Valve Housings Page 57

Muncie Dry Valve Housing Counterbore Drawing Page 58
Muncie Dry Valve Port Adapter Plates Page 59
Split Flange Port Adapter Plates Page 60
Refuse Industry Cross Over Numbers Pages 61 & 64

Miscellaneous Product Information.....Chapter 5

257 Series SAE-C Shaft End Cover w/90 Degree Rotate Page 65
Gresen Shaft End Cover Pages 66 & 67
Chelsea Shaft End Cover Pages 68 & 69
P5000 Port End Cover w/Relief Page 70
P3000 Port End Cover w/Relief Page 71
P3000 Port End Cover w/Relief Instructions Page 72
P2100 Large Portable Port End Cover Page 73
124 Series Port End Cover w/Relief Valve Page 74
Piggyback, Transition and Add-A-Pump Description Pages 75-76
Piggyback Between Series Covers Page 77
Piggyback Model Code Description Page 78
Transition Cover 5100/124 Page 79
Transition Cover 7600/124 Page 80
Transition Cover 197/124 Page 81
Transition Cover 257/124 Page 82
Transition Cover 257/197 Page 83
Transition Cover 360/124 Page 84
Transition Cover 360/197 Page 85
Transition Cover 360/257 Page 86
Transition Model Code Description Page 87
Add-A-Pump Port End Covers 3000/5000 Series Page 88
Add-A-Pump Port End Covers 197/257/360 Page 89
Add-A-Pump Model Code Description Page 90
Add-A-Pump Drawing 3000 Page 91
Add-A-Pump Drawing 5000 Page 92
Add-A-Pump Drawing 197 Page 93
Add-A-Pump Drawing 257 Page 94
Add-A-Pump Drawing 360 Page 95
124 Bushing Assembly Instructions Page 96
360 Bushing Assembly Instructions Page 97
Tell-Tale Drain Seal Breakdown Page 98
Tell-Tale Drain Seal Retainer Bulletin 2005-1 Page 99
Tell-Tale Bleed Hole Locations Drawing Page 100
Loctite Page 101
Loctite Instructions for Housings Page 102
Permco Paint Page 103
Electric Clutch Page 104
124 Series Muncie Style Clutch Bracket Page 105
Seal Kits Pages 106 & 107
Seal Kit Components Pages 108 thru 112
Standard and Viton Seal Quick Reference Guide Pages 113 & 114
Shaft Seal Application Cross Reference Page 115
Seal Insertion Tools Pages 116
Fasteners and Plastic Plugs Pages 117 thru 120
Stud Lengths Per Series Page 121
Fastener Torque Specifications per Series Page 122

Tooling.....Chapter 6

Porting Speeds and Feeds Page 123
Doweling Instructions Page 124
Tool Parts List Pages 125 & 126

Bearing Loads.....Chapter 7

197 Bearing Loads Page 127
257 Bearing Loads Page 128
360 Bearing Loads Page 129
2100/3000/3100 Bearing Loads Page 130
5000/5100/5151 Bearing Loads Page 131
7500/7600 Bearing Loads Page 132

Continental Shafts.....Chapter 8

124 Gear Shaft Availability Page 133
197 Continental Shafts Page 134
257 Continental Shafts Page 135
257 Series Code 2 1.1” Diameter 6 Spline Continental Shaft Page 136
257 Series Code 62 1-1/4” Keyed Continental Shaft Page 137
1500 Continental Shafts Page 138
2500 Continental Shafts Pages 139 & 140
2500 Series 1-1/4” Keyed Continental Shaft (Mining) Page 141
2500 Series 1-1/4” Keyed Continental Shaft w/Nut Page 142
2500 Series SAE-C-14 Spline Continental Shaft w/Nut Page 143
2100/3000/3100 Continental Shafts Page 144
3700 Continental Shafts Page 145
5000/5100/5151 Continental Shafts Page 146
5000/5100/5151 Code 62 1-1/4” Keyed Continental Shaft Page 147
7500/7600 Continental Shafts Page 148
All Series Shaft PL Factors Page 149 thru 152

Filter Element Interchange.....Chapter 9

Filters Interchange Page 153 thru 156

Winch Motor Gears.....Chapter 10

2-Speed Motor Introduction Page 157
Winch Motor Gears Page 158

I. Permco History

1964 Perfection Machining Company
Location: Cleveland, OH
Size: 1,000 Sq. Ft.
Products: Replacement parts for mining machinery
A. Shafts B. Gears C. Misc. parts

1968 Name Change: Permco, Inc.
Location: Streetsboro, OH
Size: 2,800 Sq. Ft.
Products: Same as above

1970 Abrasive Machine formed
Location: Streetsboro, OH
Products: Grinding of Permco products

1972 Permco moved to Frost Rd. location
Size: 33,000 Sq. Ft.
Products: Shafts, Gears, Misc. parts

1974 Permco expands production into cast iron parts

1978 Received patent on Diverter Plate
Products: Start to assemble complete units

1980 Received patent on Bi-Ro Diverter Plate

1982 Built new offices and warehouse after fire
Warehouse: 12,000 Sq. Ft.
Office: 8,000 Sq. Ft.

1983 Permco AG formed to service European markets

1985 June 1985, Shell family and key individuals bought out Shumates

1990 Abrasive Machine operation moved to Permco complex

1995 Built manufacturing addition of 10,000 Sq. Ft. Streetsboro

1998 Permco Tianjin formed to service Asian markets
Tianjin, China
Warehouse and Manufacturing: 7.200 Sq. Ft.
Office: 4,200 Sq. Ft.

2003 Received patent on relief valve for Gemini System

2004 Built warehouse addition 11,000 Sq. Ft. Streetsboro

2004	Permco Tianjin builds new offices, manufacturing, and warehouse facility Tianjin, China Warehouse: 12,000 Sq. Ft. Offices: 6,000 Sq. Ft.
2006	Built manufacturing and warehouse addition of 10,000 Sq. Ft. Streetsboro, Ohio
2006	Permco Tianjin Fluidpower Mfg. Co. Ltd formed to service Permco worldwide. Manufacturing: 12,000 Sq. Ft. Offices: 5,000 Sq. Ft.
2007	Built warehouse addition of 10,000 Sq. Ft. Streetsboro, Ohio

II. Personnel Information

Chairman	Robert Shell Jr.
Vice Chairman	Doris Shell
Exec. Vice Pres.	Bernard D. Shell
President, C.O.O.	Rick Olszewski
V.P. Dist. Sales	Ron Fronek
V.P. Manufacturing	Tom Huth
Plant Manager	Hank Leisure
Mgr. Inside Sales	Tim Hill
Chief Engineer	David Earls
Engineering	Joel Aukerman, Rick Conner, Aimee Liu, Alan Smallsreed
Warranty Dept.	Kevin Hall
Inside Sales: Units	Amy Wheeler, Ron Root, George Brna, Laurie Richards,
Traffic Manager	Kim Slayko
Assistant Comptroller	Karen Slayko
Credit Manager	Al Jackson
Purchasing Manager	Dale Pudloski
IT Technicians	Mark Gidley, Dennis Schmiz

III. Company Information

Permco
P. O. Box 2068
1500 Frost Road
Streetsboro, OH 44241-0869
Phone: 330-626-2801
Fax: 330-626-2805
Toll Free: 800-626-2801

Web Site: www.permco.com
Information: www.info@permco.com

Permco Hydraulik AG
P. O. Box 553
6343 Rotkreuz
Switzerland
Phone: +41 (0)41 850 86 85
Fax: +41 (0)41 850 86 67

Information:
www.heinzm@permco.com

Permco (Tianjin) Hydraulic Inc. Ltd
#92 Hai Bin Wu Lu, Port Freezone
Tianjin Port, China
Phone: 022-25702597
Fax: 022-25760830

Website: www.permcotj.com
Information: www.permco@permcotj.com

Permco Tianjin Fluidpower Mfg. Co Ltd.
Fenghua Industrial Park 9th Avenue
Teda, China 300457

PRESENTATION OUTLINE

I. PRODUCT LINE

A. Pumps, Motors, Flow Dividers, Miscellaneous Parts and Accessories

II. MARKETS

A. Refuse Industry – Rubbish and Garbage
B. Construction Companies and Pavers
C. Trucking Companies
D. Industrial Accounts - Localize this List
E. Hydraulic Repair Shops
F. Equipment Dealers – Independents
G. Scrap Iron Dealers – Cranes, Roll-Offs, Compactors
H. Timber Harvesters and Processors
I. Mining Operations – Gravel, Coal, Iron, Gold, etc.
J. Commercial Fishing Industry
K. Municipalities – State, County, Parrish, City, Township

III. C/S – PERMCO REPLACEMENT PARTS AND PUMPS

IV. PERMCO HAS MANY OTHER NEW AND UNIQUE PRODUCTS

V. GO THROUGH LITERATURE PIECE BY PIECE

VI. GO BACK TO ENGINEERS HANDBOOK – PAGE 5

A. Go over series and cubic inch displacements
B. PL factor – explain – refer to bottom of page 3
C. Emphasize per inch of gear width
D. Port sizing on page 6
E. Performance data – actual from test stand – not theoretical
F. Page 13 – pump numbering and coding
G. Shaft end covers, port end covers, housings, shafts, bearing carriers; Note: page 48 flow limits per section
H. Flow dividers – Positraction – 1-1, 1-2, 1-3, etc

VII. NOTE SERIES IDENTIFICATION CHARTS – BACK SECTION OF SERVICE MANUALS

VIII. IF NECESSARY, GO THROUGH CUBIC INCH DISPLACEMENT FORMULA

SUGGESTED MARKETING PLAN

I. Make a list of prospects for:

A. Refuse Industry – Rubbish and Garbage
B. Construction Companies and Pavers
C. Trucking Companies
D. Industrial Accounts - Localize this List
E. Hydraulic Repair Shops
F. Equipment Dealers – Independents
G. Scrap Iron Dealers – Cranes, Roll-Offs, Compactors
H. Timber Harvesters and Processors
I. Mining Operations – Gravel, Coal, Iron, Gold, etc.
J. Commercial Fishing Industry
K. Municipalities – State, County, Parrish, City, Township

II. Separate this list into two (2) categories:

A. Existing Customers
B. Potential New Business

III. Mailing – Arrange to do a mailing on a limited, consistent program. Leads that are not followed up on within a week become stale. Possibly target one market at a time.

IV. Keep all lead and work sheets – with comments.

V. Keep track of calls and specific market areas on a wall map. Watch trends.

VI. Establish company policy on pricing and review monthly to monitor competition and maximize profit margins.

VII. Learn product line – thoroughly.

PERMCO is your # 1 Gear Pump Source for 10 Good Reasons

1. **BEST PRODUCT LINE** - One call gives you access to a complete line of pumps, motors, flow dividers, intensifiers, or replacement parts. This includes MRO and OEM products.

2. **COMPETITIVE PRICING** - Permco's expansive distributor base allows us the economics of production to offer competitive pricing.

3. **EXPERT HELP** - Permco's personnel are trained hydraulic individuals. All inside people have attended hydraulics classes. We have Engineers on staff as well as a registered Professional Engineer for specialized projects.

4. **FAST DELIVERY & SERVICE** - Our inventory is designed so that we can ship parts orders in (2) weeks or less and unit orders in (4) weeks or less.

5. **SPECIAL ORDER ITEMS** - Special order items receive our immediate attention. This includes special shafts, brackets, etc. to meet a particular customer or market needs.

6. **COMPLETE UNITS** - Permco offers over 27,000 different units. Each is built to customer specifications. All units are tested with the results written on a tag affixed to the pump and recorded in a master log. All results are catalogued and serial numbered to reduce your liability as well as ours.

7. **TRAINING CLASSES** - Permco offers training classes in hydraulics, two to four times a year. These are open to you and your employees. Basic hydraulics, troubleshooting and hands-on building and testing of pumps is covered during the training session.

8. **ENGINEERING & RESEARCH & DEVELOPMENT** - Permco's Engineering Department is continually working on improving existing products as well as looking at new and innovative designs. The controlled stress roller bearings for increased bearing life, the Versa-Pak series, the Gemini, Winch Motors and special application thrust plates just to name a few.

9. **SALES REPRESENTATION** - Factory trained representatives are available on a regular basis to work with your people. Whether it would be repair or technical training – we are available.

10. **OUR WILLINGNESS TO WORK WITH YOU** - As a manufacture of hydraulic components, we are aware that you have a choice. We are aware that the products we offer are only as good as our willingness to support their applications. You can count on us to swiftly respond should problems arise and to help you rapidly solve them.

YOU HAVE A CHOICE — MAKE IT PERMCO

PERMCO

UNIT WARRANTY RETURN PROCEDURE

In order for Permco to better serve the customer with regard to warranty claims or pump/motor failure evaluation, the following procedures need to be followed:

1. No unit will be received without a Return Authorization Number (RAN).

2. Return Authorization Numbers, will remain active for a period of thirty (30) days. If unit/units are not received at Permco within this period of time, a new RAN must be attained.

3. Permco will strive to evaluate failures and determine if they are warranty related. We will reply as quickly as possible, contact you with a determination as to repair of unit, replacement of unit or help the customer with the problem as per the customer's discretion. It is imperative that the customer respond to Permco as to what he wants done with the returned unit within a reasonable amount of time (60 days max.). After 60 days Permco will dispose of the unit and consider the matter closed.

4. In order to better serve the customer, Permco request that the units should be returned unopened. A unit that has been disassembled prior to returning it to us makes accurate determination and evaluation impossible to determine. If a unit has been opened, it is important to re-assemble it "exactly" as it came apart. Do not return loose parts to Permco. Parts shipped loose can be damaged and proper orientation is impossible.

Your cooperation will be greatly appreciated.

Engineering Department

PERMCO WARRANTY POLICY
(EFFECTIVE 07/01/2009)

PRODUCT WARRANTY: PERCMO warrants that when shipped from Permco's manufacturing facility, the products sold hereunder (i) shall be new and unused; and (ii) shall be free from defects in material and workmanship for the term of this warranty. PERMCO makes no warranty on any product used in any way except as it was designed, intended and sold to perform.

This warranty does not apply to any special products or items designed and/or manufactured to a customer's specifications. Such products have no warranties except as set forth in a separate written warranty signed by a divisional president of Permco or two other officers of Permco.

WARRANTY PERIOD: The warranty set forth above shall commence on the date that said product is shipped to the original buyer of said product (the "Warranty Start Date") and shall expire on the earlier of: (i) 24 months from the Warranty Start Date; or (ii) 4,000 hours of normal use.

EARLY TERMINATION OF WARRANTY PERIOD: The warranty period stipulated above shall terminate if buyer or a third party undertakes inappropriate or improper modification or repair, including, but not limited to, the use of other than genuine Permco parts in the repair of said product, or if the buyer, in case of a defect, does not as soon as reasonably possible take all appropriate steps to mitigate its damages and to notify Permco in writing of buyer's warranty claim.

EXCLUSIONS FROM WARRANTY: Excluded from Permco's warranty and liability for defects are all deficiencies which cannot be proved to have their origin in bad material or poor workmanship, e.g. for deficiencies resulting from normal wear and tear, improper maintenance or repair, use of replacement parts other than genuine Permco parts, misuse, neglect, improper handling or storage, failure to observe the operating instructions, pressure spikes, or deficiencies resulting from other reasons beyond Permco's control, including damages caused by erosion, corrosion or cavitation.

EXCLUSIVE REMEDY: Permco's sole liability to buyer arising from, or relating to, any product sold hereunder shall be limited exclusively to repair or replacement of the product sold, or refund of the purchase price paid by buyer, at Permco's sole option, in accordance with the procedures set forth herein.

WARRANTY CLAIM: If a buyer claims a breach of the warranty set forth above, buyer must:

(i) Promptly notify Permco in writing of the alleged defect in materials and/or workmanship, including the circumstances of the product failure;
(ii) Utilize the warranty claim form, if any, then being currently utilized by Permco;
(iii) Provide Permco with such other information as reasonably requested by Permco or its agents regarding the product failure and the surrounding circumstances;
(iv) Provide Permco, at Permco's option, with the right to examine the product in question at the site of the failure or to ship, at the buyer's cost, the product back to Permco's facility or an authorized warranty repair center according to shipping instructions provided by Permco;
(v) Obtain a Return Authorization Number (RAN) from Permco if the product is to be returned to Permco or its authorized warranty repair center (Please note: a RAN shall be valid for only 30 days and shall be referenced in all correspondence from buyer to Permco);
(vi) If so requested, return the product unopened to Permco as a unit; and
(vii) Unless so instructed by Permco, retain any loose parts.

Please note that a unit that has been disassembled prior to returning it to Permco makes accurate determination and evaluation impossible. If a unit has been opened, it is important to re-assemble it "exactly" as it came apart.

Within 60 days from the inspection of the product by Permco or its agent, Permco shall determine whether a valid warranty claim exists. If a valid claim exists, Permco, at its sole option, shall either (i) replace or repair the product and then ship the repaired or replacement product to buyer at Permco's sole cost; or (ii) refund the purchase price paid by

buyer for said product. If a valid warranty claim exists, Permco shall also reimburse buyer for the cost of shipping the product to Permco or its agent.

If Permco determines a valid warranty claim does not exist, it will advise the buyer of its determination in writing and will request the buyer advise Permco as to what it wants done with the returned product. After 60 days, Permco will dispose of the returned product and consider the matter closed. If the buyer requests the return of the product, buyer shall pay the cost of return in advance prior to Permco's shipment of said product back to said buyer.

DISCLAIMER OF WARRANTIES: PERMCO MAKES NO PERFORMANCE GUARANTEE, WARRANTY OR REPRESENTATION WITH RESPECT TO ITS PRODUCTS EXCEPT AS SET FORTH HEREIN. ALL OTHER PERFORMANCE GUARANTEES, WARRANTIES, EXPRESS OR IMPLIED, INCLUDING, BUT NOT LIMITED TO THE IMPLIED WARRANTIES OF MERCHANTABILITY AND FITNESS FOR A PARTICULAR PURPOSE, OR THOSE WHICH MIGHT ARISE BY OPERATION OF LAW OR EQUITY, TRADE USAGE, OR COURSE OF DEALING ARE HEREBY DISCLAIMED.

LIMITATION OF REMEDIES: BUYER'S SOLE AND EXCLUSIVE REMEDY AGAINST PERMCO SHALL BE AS SET FORTH ABOVE. THE EXCLUSIVE REMEDIES SET FORTH ABOVE SHALL NOT BE DEEMED TO HAVE FAILED THEIR ESSENTIAL PURPOSE SO LONG AS PERMCO IS WILLING TO REPAIR, REPLACE, MODIFY OR CORRECT THE PRODUCT IN THE MANNER AND WITHIN THE LIMITS PRESCRIBED HEREIN OR REFUND THE PURCHASE PRICE PAID BY THE BUYER.

If, for any reason, any or all of the exclusive remedies provided herein are deemed by a court of law to have failed of their essential purpose or otherwise by unavailing as limits on the buyer's remedies for breach of the warranty contained herein, then it is the intent of the parties that the Limitation on Liability set forth below, which limits liability and prohibits consequential damages, nevertheless shall be accorded independent effect and would remain in full force as reflecting the allocation of risk intended by Permco and the buyer.

LIMITATION OF LIABILITY: NOTWITHSTANDING ANY OTHER PROVISIONS HEREOF OR ANY OTHER PROVISION OF ANY AGREEMENT BETWEEN PERMCO AND BUYER, PERMCO SHALL NOT BE LIABLE TO BUYER OR ANY OTHER PARTY FOR ANY LOSS OF ANTICIPATED PROFITS, LOST SALES, INJURY TO PERSONS OR PROPERTY, LOSS BY REASON OF PLANT SHUTDOWN, NON-OPERATION OR INCREASED EXPENSE OF OPERATION, SERVICE INTERRUPTIONS, CLAIMS OF CUSTOMERS, COST OF MONEY, LOSS OF USE OF CAPITAL OR REVENUE, OR FOR ANY OTHER SPECIAL, INCIDENTAL OR CONSEQUENTIAL LOSSES OR DAMAGES OF ANY KIND OR NATURE WHATSOEVER, WHETHER ALLEGED TO ARISE FROM BREACH OF CONTRACT, BREACH OF WARRANTY, OR IN TORT, INCLUDING WITHOUT LIMITATION, NEGLIGENCE, FAILURE TO WARN OR STRICT LIABILITY. NO CAUSE OF ACTION ARISING OUT OF, OR RELATING TO, THE SALE OF THE ITEMS SOLD HEREUNDER OR THIS AGREEMENT MAY BE BROUGHT MORE THAN TWO (2) YEARS AFTER THE CAUSE OF ACTION SHALL ACCRUE.

MODIFCATION OF WARRANTY: The foregoing warranty may not be modified, extended or altered except by a writing signed by a divisional president of Permco or two other officers of Permco**.**

EFFECTIVE DATE: This Warranty is effective July1, 2009 and supersedes all previously distributed warranties. It shall remain in effect until such time as Permco publishes a subsequent superceding version at which time it will have no further effect.

GOVERNING LAW: This Warranty and the sale and delivery of all products hereunder shall be governed and construed in accordance with the laws of the United States, excluding the United Nations Convention on Contracts for the International Sale of Goods.

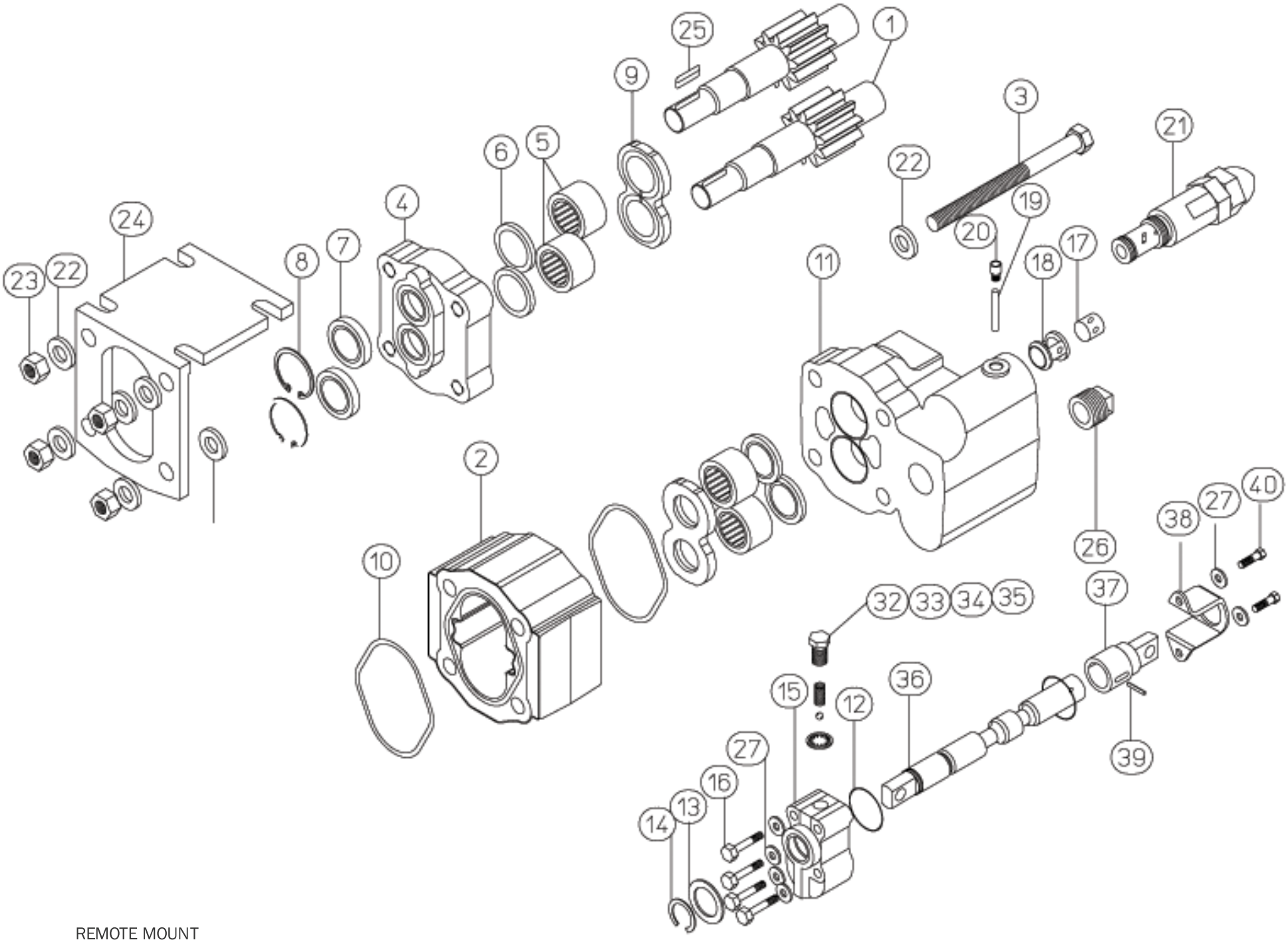

REMOTE MOUNT

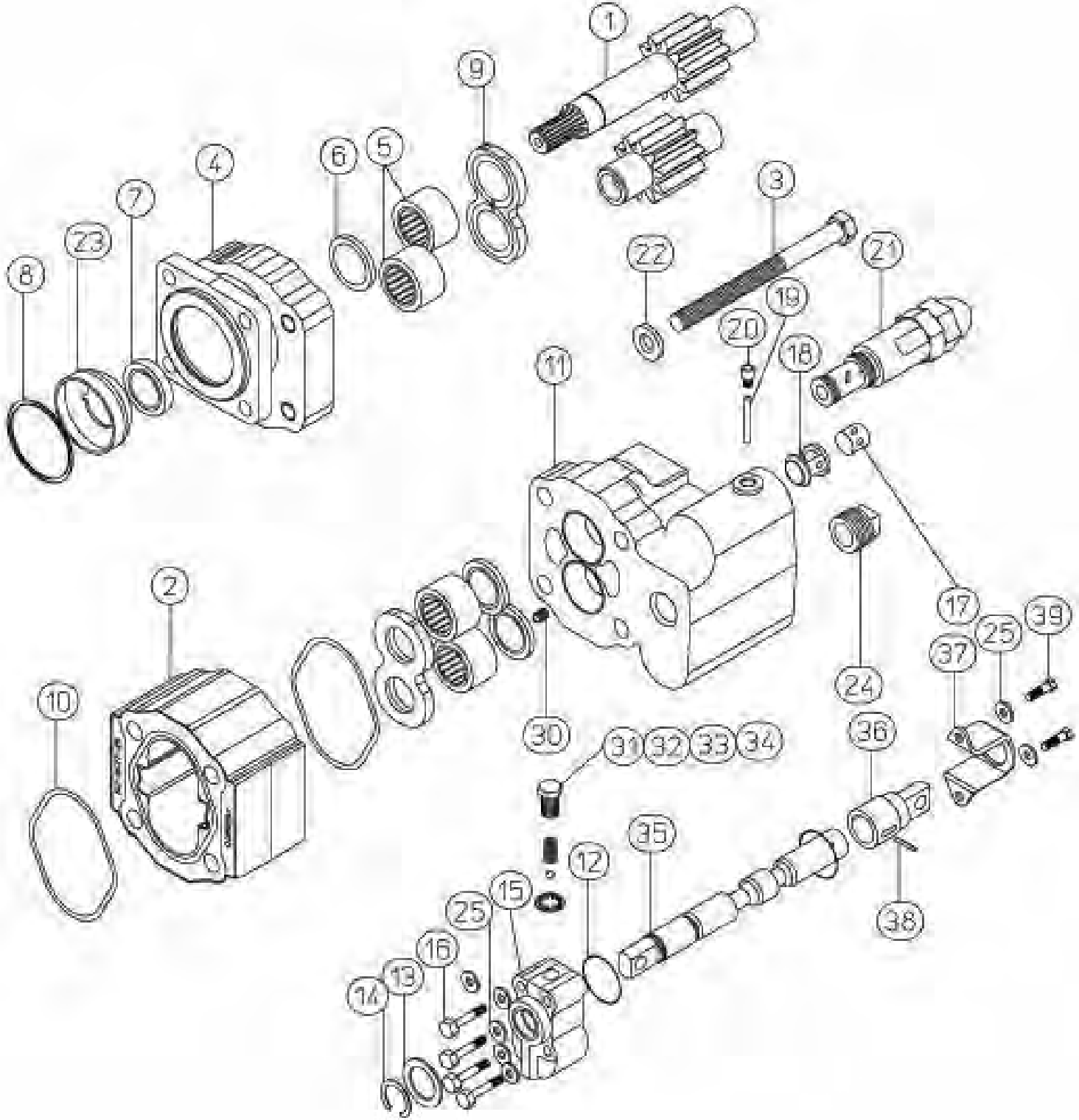

DIRECT MOUNT

PARTS BREAKDOWN FOR REMOTE MOUNT DM-512-20-XR-M-T-200

ITEM	PART NO.	DESCRIPTION	QTY		ITEM	PART NO.	DESCRIPTION	QTY
1	CD-0024L-20	GEAR SET 1" DIA. KEYED	1		21	RP-5514	RELIEF VALVE	1
2	SZ-0577-20	GEAR HOUSING	1		22	W033-2	5/8" WASHER	12
3	ZD-0391-08	5/8"-11 X 8" TIE BOLTS	4		23	W3-65	5/8"-11 NUT	8
4	WA-0575	SHAFT END COVER	1		24	D-0931	MOUNTING BRACKET	1
5	R-0921	ROLLER BEARING	4		25	W09-02	1/4 X 3/8 X 1-1/4 SHAFT KEY	1
6	MA-0558-1XS	RING SEAL	4		26	W0-5	1" NPT STEEL PIPE PLUG	1
7	W62-49-3NP	SHAFT SEAL NO PAINT	2		27	DM-250-LW	5/16" SPLIT LOCK WASHER	6
8	W023-181	SNAP RING	2		28	#42	1" NPT PLASTIC PLUG	1
9	X-0947-TC	THRUST PLATE	2		29	#53	1-1/4" NPT PLASTIC PLUG	1
10	TA-2995-245	SQ. GASKET SEAL	2		30	Z-1967-45-2	NAME TAG	1
11	ZF-0920	VALVE HOUSING	1		31	SP-1000-3	PLASTIC SHAFT PROTECTOR	2
12	K-2995-9	O'RING	2		32	640-00224-BSR	BALL & SPRING RETAINER	1
13	CR80-3	SPOOL STOP	1		33	640-00520-SPR	DETENT SPRING	1
14	W093-2XH	SNAP RING	1		34	640-00521-B	DETENT BALL	1
15	AB-0949-P	SPOOL END CAP	1		35	LW-0949	LOCK WASHER	1
16	WI-71	5/16"-18 X 2" CAP SCREW	4		36	640-00522-NLS	SPOOL	1
17	MC-0429	CHECK VALVE POPPET	1		37	640-00523-SE	SPOOL EYE	1
18	UZ-0071-10	CHECK VALVE RETAINER	1		38	640-00524-ER	SPOOL EYE RETAINER	1
19	W014-218	RETAINER PIN	1		39	640-00544	ROLL PIN	1
20	W0-28	PIPE PLUG 1/16" NPT	1		40	640-00302-CMB	5/16"-18 X 1/2" CAP SCREW	2

NOTE: PART NO.'S 28, 29, 30, 31 NOT ON DRAWING

PARTS BREAKDOWN FOR REMOTE MOUNT DM-640-25-XR-M-T-200

ITEM	PART NO.	DESCRIPTION	QTY		ITEM	PART NO.	DESCRIPTION	QTY
1	CD-0024L-25	GEAR SET 1" DIA. KEYED	1		21	RP-5514	RELIEF VALVE	1
2	SZ-0577-25	GEAR HOUSING	1		22	W033-2	5/8" WASHER	12
3	W1-009	5/8"-11 X 7-1/2" BOLTS	4		23	W3-65	5/8"-11 NUT	8
4	WA-0575	SHAFT END COVER	1		24	D-0931	MOUNTING BRACKET	1
5	R-0921	ROLLER BEARING	4		25	W09-02	1/4 X 3/8 X 1-1/4 SHAFT KEY	1
6	MA-0558-1XS	RING SEAL	4		26	W0-5	1" NPT STEEL PIPE PLUG	1
7	W62-49-3NP	SHAFT SEAL NO PAINT	2		27	DM-250-LW	5/16" SPLIT LOCK WASHER	6
8	W023-181	SNAP RING	2		28	#42	1" NPT PLASTIC PLUG	1
9	X-0947-TC	THRUST PLATE	2		29	#53	1-1/4" NPT PLASTIC PLUG	1
10	TA-2995-245	SQ. GASKET SEAL	2		30	Z-1967-45-3	NAME TAG	1
11	ZF-0920	VALVE HOUSING	1		31	SP-1000-3	PLASTIC SHAFT PROTECTOR	2
12	K-2995-9	O'RING	2		32	640-00224-BSR	BALL & SPRING RETAINER	1
13	CR80-3	SPOOL STOP	1		33	640-00520-SPR	DETENT SPRING	1
14	W093-2XH	SNAP RING	1		34	640-00521-B	DETENT BALL	1
15	AB-0949-P	SPOOL END CAP	1		35	LW-0949	LOCK WASHER	1
16	WI-71	5/16"-18 X 2" CAP SCREW	4		36	640-00522-NLS	SPOOL	1
17	MC-0429	CHECK VALVE POPPET	1		37	640-00523-SE	SPOOL EYE	1
18	UZ-0071-10	CHECK VALVE RETAINER	1		38	640-00524-ER	SPOOL EYE RETAINER	1
19	W014-218	RETAINER PIN	1		39	640-00544	ROLL PIN	1
20	W0-28	PIPE PLUG 1/16" NPT	1		40	640-00302-CMB	5/16"-18 X 1/2" CAP SCREW	2

NOTE: PART NO.'S 28, 29, 30, 31 NOT ON DRAWING

PARTS BREAKDOWN FOR DIRECT MOUNT DMD-20-X-L-MS-20

ITEM	PART NO.	DESCRIPTION	QTY		ITEM	PART NO.	DESCRIPTION	QTY
1	UC-0024L-1-20	GEAR SET B-SPLINE	1		21	RP5514	RELIEF VALVE	1
2	SZ-0577-20	GEAR HOUSING	1		22	W033-2	5/8" WASHER	4
3	W1-78	5/8"-11 X 5-1/2" BOLT	2		23	558-00474-BS	BEARING SPACER	1
3	ZD-0391-08WN	5/8"-11 X 8" TIE ROD/W/NUT	2		24	WO-5	1" NPT STEEL PIPE PLUG	1
4	GA-0574-3	SHAFT END COVER 4-BOLT-B	1		25	DM-250-LW	5/16" LOCK WASHER	6
5	R-0921	ROLLER BEARING	4		26	SP-1000-8	PLASTIC SHAFT PROTECTOR	1
6	MA-0558-1XS	RING SEAL	3		27	Z-1967-45-2	NAME TAG	1
7	W62-49-8NP	SHAFT SEAL NO PAINT	1		28	#42	1" NPT PLASTIC PLUG	1
8	W023-283	SNAP RING	1		29	#53	1 1/4" NPT PLASTIC PLUG	1
9	X-0947-TC	THRUST PLATE	2		30	WO-19	1/8"-27 NPT PIPE PLUG	1
10	TA-2995-245	HOUSING GASKET SEAL	2		31	640-00224-BSR	BALL & SPRING RETAINER	1
11	ZF-0920	VALVE HOUSING	1		32	640-00520-SPR	DETENT SPRING	1
12	K-2995-9	O'RING	2		33	640-00521-B	DETENT BALL	1
13	CR80-3	SPOOL STOP	1		34	LW-0949	LOCK WASHER	1
14	W093-2XH	SNAP RING	1		35	640-00522-NLS	SPOOL	1
15	AB-0949-P	SPOOL END CAP	1		36	640-00523-SE	SPOOL EYE	1
16	WI-71	5/16"-18 X 2" CAP SCREW	4		37	640-00524-ER	SPOOL EYE RETAINER	1
17	MC-0429	CHECK VALVE POPPET	1		38	640-00544	ROLL PIN	1
18	UZ-0071-10	CHECK VALVE RETAINER	1		39	640-00302-CMB	5/16"-18 X 1/2" CAP SCREW	2
19	W014-218	RETAINER PIN	1		40	S-0280	PLUGS FOR SEC	2
20	WO-28	PIPE PLUG 1/16" NPT	1		41	SP-1000-7	PLASTIC THREAD PROTECTOR	2

NOTE: PART NO.'S 26,27,28,29, 41 NOT ON DRAWING

PARTS BREAKDOWN FOR DIRECT MOUNT DMD-25-X-L-MS-20

ITEM	PART NO.	DESCRIPTION	QTY		ITEM	PART NO.	DESCRIPTION	QTY
1	UC-0024L-1-25	GEAR SET B-SPLINE	1		21	RP5514	RELIEF VALVE	1
2	SZ-0577-25	GEAR HOUSING	1		22	W033-2	5/8" WASHER	4
3	W1-65	5/8"-11 X 6" BOLT	2		23	558-00474-BS	BEARING SPACER	1
3	ZD-0391-08WN	5/8"-11 X 8" TIE ROD/W/NUT	2		24	WO-5	1" NPT STEEL PIPE PLUG	1
4	GA-0574-3	SHAFT END COVER 4-BOLT-B	1		25	DM-250-LW	5/16" LOCK WASHER	6
5	R-0921	ROLLER BEARING	4		26	SP-1000-8	PLASTIC SHAFT PROTECTOR	1
6	MA-0558-1XS	RING SEAL	3		27	Z-1967-45-4	NAME TAG	1
7	W62-49-8NP	SHAFT SEAL NO PAINT	1		28	#42	1" NPT PLASTIC PLUG	1
8	W023-283	SNAP RING	1		29	#53	1 1/4" NPT PLASTIC PLUG	1
9	X-0947-TC	THRUST PLATE	2		30	WO-19	1/8"-27 NPT PIPE PLUG	1
10	TA-2995-245	HOUSING GASKET SEAL	2		31	640-00224-BSR	BALL & SPRING RETAINER	1
11	ZF-0920	VALVE HOUSING	1		32	640-00520-SPR	DETENT SPRING	1
12	K-2995-9	O'RING	2		33	640-00521-B	DETENT BALL	1
13	CR80-3	SPOOL STOP	1		34	LW-0949	LOCK WASHER	1
14	W093-2XH	SNAP RING	1		35	640-00522-NLS	SPOOL	1
15	AB-0949-P	SPOOL END CAP	1		36	640-00523-SE	SPOOL EYE	1
16	WI-71	5/16"-18 X 2" CAP SCREW	4		37	640-00524-ER	SPOOL EYE RETAINER	1
17	MC-0429	CHECK VALVE POPPET	1		38	640-00544	ROLL PIN	1
18	UZ-0071-10	CHECK VALVE RETAINER	1		39	640-00302-CMB	5/16"-18 X 1/2" CAP SCREW	2
19	W014-218	RETAINER PIN	1		40	S-0280	PLUGS FOR SEC	2
20	WO-28	PIPE PLUG 1/16" NPT	1		41	SP-1000-7	PLASTIC THREAD PROTECTOR	2

NOTE: PART NO.'S 26,27,28,29, 41 NOT ON DRAWING

PERMCO DUMP PUMP 2 AND 3 LINE OPERATION

In applying the Permco Dump Pump, an understanding of the 2 line and 3 line circuits is essential for proper operation and maximum unit life.

In the 2 line operation, one line is connected from the oil tank to the inlet of the pump and one line is connected from the cylinder port of the valve to the cylinder. With the pump engaged and the valve spool in the neutral position, oil will recirculate inside the unit. **It has been determined through testing that the rise in temperature per every minute of operation in this mode is 7.5°F.** If operation is allowed to continue beyond the recommended 5 minute time interval, a reduction in clearances of the rotating group due to excessive heat and subsequent expansion will occur. The result may lead to the unit locking up and premature failure of the drive shaft or other internal components.

In a 3 line operation, one line is connected from the oil tank to the inlet of the pump, one line is connected from the cylinder port to the cylinder and one line is connected from the pumps return port back to the oil tank. To connect this port, the 1" pipe plug must be removed for hose connection and a metal sleeve, Permco P/N RZ-0206 (DM-512, DM-640, DMD-20 and DMD-25) P/N 400-00870 (DMR-300, DMR-400, DMD-300 and DMD-400), must be inserted into the inlet port of the valve. By inserting the sleeve into the inlet port, flow from either the cylinder retracting or with the spool in neutral will be diverted directly back to the oil tank.

It should be noted that the operation of the Dump Pump with the 3 line circuit will reduce the possibility of premature failure due to excessive heating but will not eliminate it. It is therefore recommended that the unit be run in this mode of operation for no longer than 10 minutes.

General Comments Concerning the Application and Operation of the Dump Pump

As discussed earlier with the 3 line operation, the metal sleeve inserted in the inlet port of the pump diverts flow back to the oil tank. With this sleeve installed in a 2 line system, only a minimal amount of oil will pass across it. The majority of the oil will be blocked from recirculating internally. If the pump is engaged and the spool is in the neutral position, flow may be directed back, into the cylinder port and extend the cylinder.

CAUTION: Operation with the sleeve installed in a 2 line application is potentially hazardous. Because the factory is unaware of which return line circuit the customer will choose the sleeve is never installed at the factory.

Like any control valve, there are inherent pressure drops within the dump pump due to internal core configurations. During cylinder retraction, fluid velocities may increase to the point that excessive back pressures may be seen at the pump seal area. For this reason, Permco installs high pressure motor seals in all Dump Pump units to prevent premature seal failure. It is also suggested that movement of the valve spool from the neutral to the raise position in rapid succession be avoided as this may also contribute to the premature failure of the shaft seal.

NOTE: The pump should be primed with spool in raise position.
It may be required to crack a fitting to bleed lines of air.

Circuit Schematics of 2 Line and 3 Line Operation

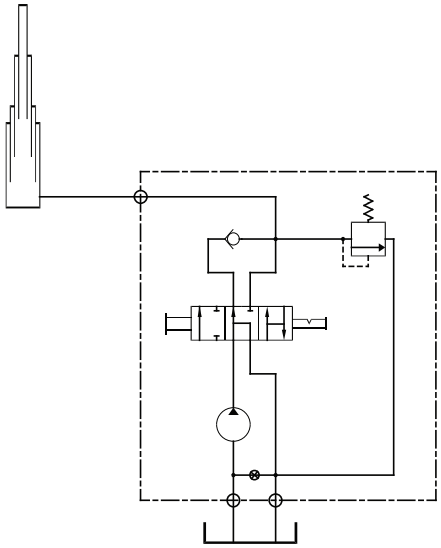

3 LINE CABLE SHIFT

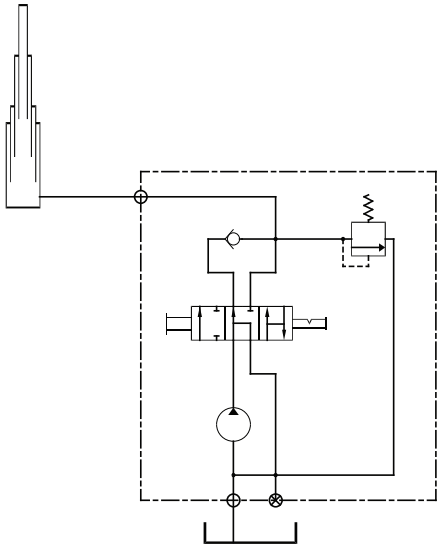

2 LINE CABLE SHIFT

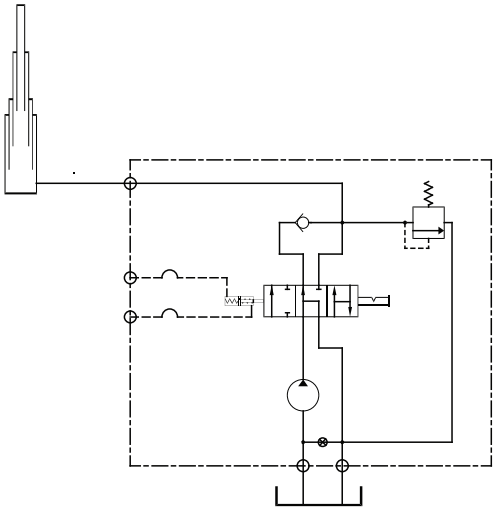

3 LINE AIR SHIFT

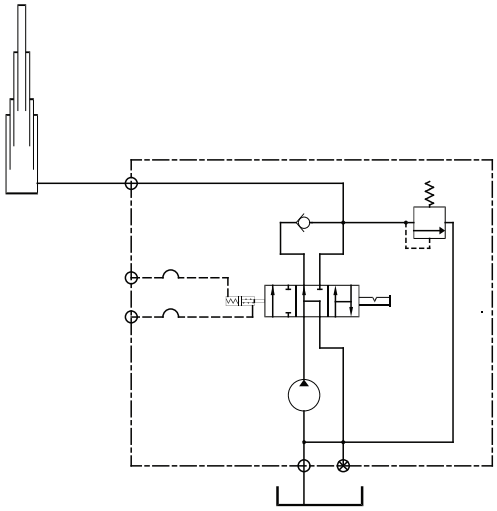

2 LINE AIR SHIFT

SUBJECT: CHANGE-OVER PROCEDURE FROM 2 LINE TO 3 LINE

TO INSTALL OR CONVERT A DUMP PUMP TO A 3 LINE SYSTEM FROM A 2 LINE SYSTEM, PLEASE FOLLOW THE FOLLOWING PROCEDURES:

STEP ONE: DISCONNECT THE INLET HOSE AND INSTALL THE METAL SLEEVE P/N RZ-0206 (DM-512, DM-640, DMD-20 & DMD-25), SLEEVE P/N 400-00870 (DMR-300, DMR-400, DMD-300 & DMD-400), RECONNECT THE LINE.

STEP TWO: RUN A 1" ID LINE (DM-512, DM-640, DMD-20 & DMD-25), ¾" ID LINE (DMR-300, DMR-400, DMD-300 & DMD-400), FROM THE PORT MARKED **RETURN** BACK TO THE TANK. PLEASE MAKE SURE THAT THE LINE GOES INTO THE TANK BELOW THE OIL LEVEL WHEN THE CYLINDER IS FULLY EXTENDED. WHEN THE CYLINDER IS FULLY EXTENDED MOST OF THE OIL IS IN THE CYLINDER, NOT THE TANK.

STEP THREE: TOP OFF THE FLUID LEVEL AND CHECK THE FUNCTION OF THE PUMP.

PLEASE NOTE: IF INSTALLING A FILTER IN THE THIRD LINE, THE HOSE FROM THE **RETURN** PORT TO THE FILTER SHOULD BE 1" ID (DM-512, DM-640, DMD-20 & DMD-25), ¾" ID LINE (DMR-300, DMR-400, DMD-300 & DMD-400), FROM THE FILTER TO THE TANK THE HOSE SHOULD BE 1-1/4" ID (DM-512, DM-640, DMD-20,DMD-25, DMR-300, DMR-400, DMD-300 & DMD-400). ALSO THE FILTERS SHOULD BE CAPABLE OF 90 GPM AS TO NOT BLOW THE FILTERS OFF THE HEADS. WE RECOMMEND A 25 PSI BYPASS WITH TWO FILTERS AND A FILTER CHANGE INDICATOR GAGE.

WE STRONGLY RECOMMEND FILTERING THE OIL TO ACHIEVE MAXIMUM PUMP LIFE.

PART NUMBERS FOR THE FILTER HEAD, FILTERS AND INDICATOR GAGE:

90 GPM
FILTER HEAD: SP80 (SIDE BY SIDE) FILTER: 70172 (2 REQUIRED)

INDICATOR GAGE: HSP15P

PARTS LIST FOR 2 LINE TO 3 LINE CHANGE-OVER

1- RZ-0206 OR 400-00870
1-1" OR ¾"ID HOSE (LONG ENOUGH TO REACH FROM THE PUMP TO TANK)

PARTS LIST FOR 2 LINE TO 3 LINE CHANGE-OVER WITH FILTER

1- RZ-0206 OR 400-00870
1- SP 80-SIDE BY SIDE (90 GPM) FILTER HEAD
2- FILTERS P/N 70172 (25 MICRON 90 GPM)
1- INDICATOR GAGE
1- 1" OR ¾" ID HOSE (LONG ENOUGH TO REACH FROM PUMP TO FILTER) 1-1/4" ID HOSE (LONG ENOUGH TO REACH FROM FILTER TO TANK)

PERMCO

2 Line Wet Line Kit for Dump Application

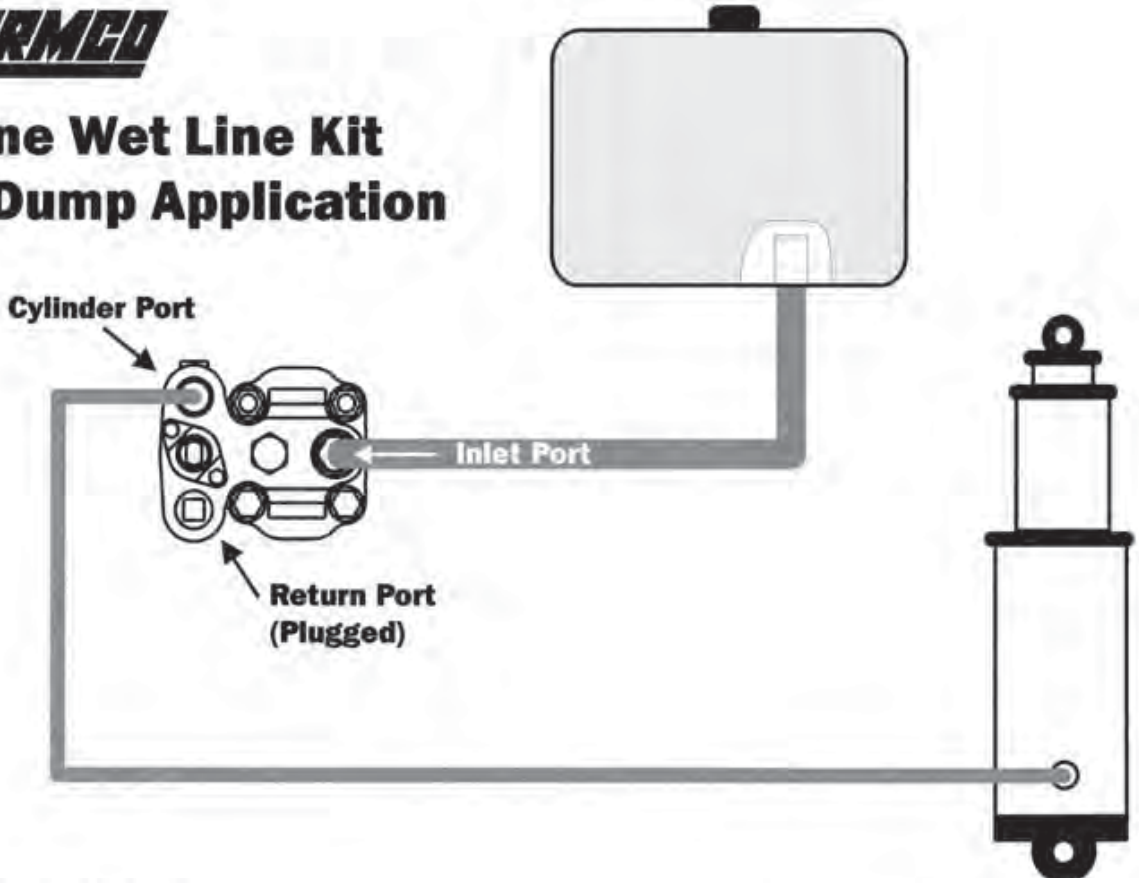

PERMCO

3 Line Wet Line Kit for Dump Application

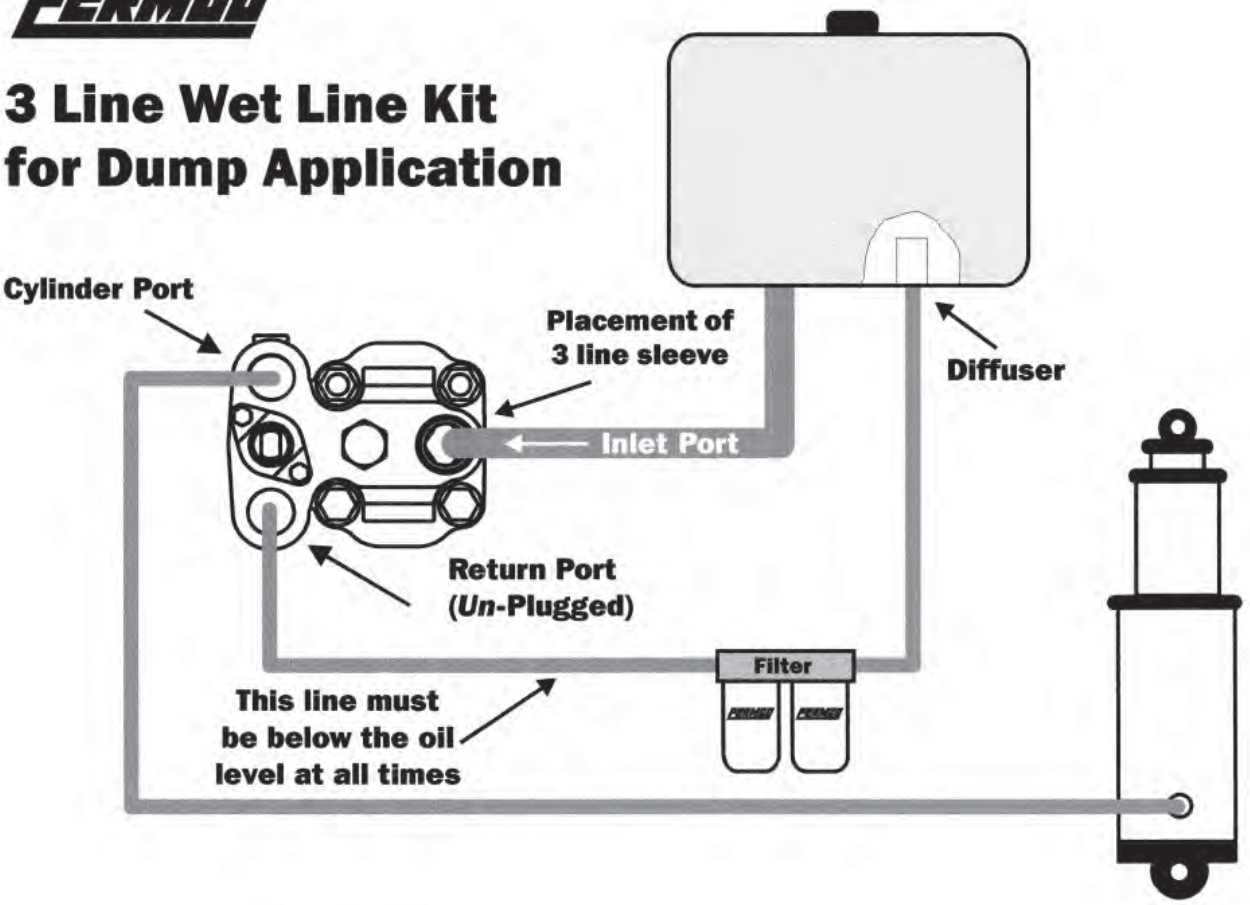

HYDRAULIC / PNEUMATIC PRODUCTS
1500 Frost Road • Post Office Box 2068 • Streetsboro, Ohio 44241-0869 • 330/626-2801 • Fax: 330/626-2805

To: All Permco Distributors **Date: July 12, 1994**

Subject: DUMP PUMP RELIEF VALVE

Series: DM-512-20, DM-640-25, DMD-20 and DMD-25

DUMP PUMP RELIEF VALVE RP-5514

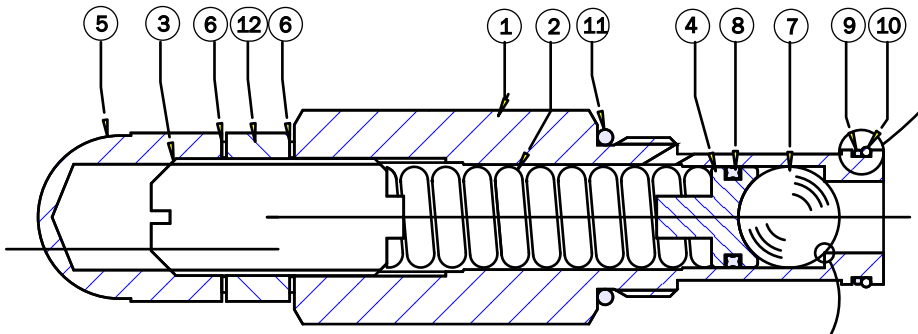

If items 9 or 10 are damaged, oil will bypass relief valve

If dirt or debris gets under ball between ball and seat oil will bypass relief and/or allow cylinder to drift down

ITEM	PART NO.	DESCRIPTION	REQ'D
1	RP-5514-1	CARTRIDGE	1
2	RP-5514-2	SPRING	1
3	RP-5514-3	SPRING RETAINER	1
4	RP-5514-4	BALL RETAINER	1
5	RP-5514-5	RELIEF VALVE CAP	1
6	RP-5514-6	COMPRESSION WASHER	2
7	RP-5514-7	BALL	1
8	RP-5514-8	QUAD RING	1
9	RP-5514-9	BACK-UP RING	1
10	RP-5514-10	"O"-RING	1
11	RP-5514-11	"O"-RING	1
12	RP-5514-12	JAM NUT	1

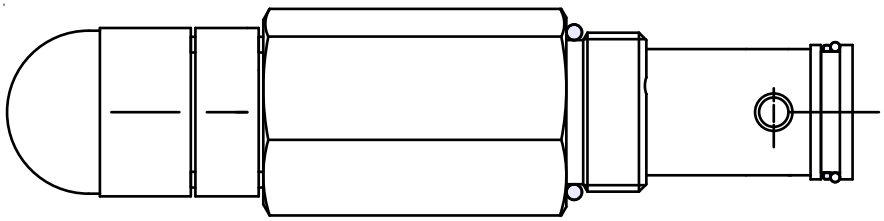

* In the event the relief valve is disassembled - Calibration must be done on a test stand

To set relief valve to 2500 PSI, when it is set at 2000 PSI from the factory remove item #5, loosen item #12, turn item #3 3/8 of a turn clockwise then tighten item #12 and replace item #5.

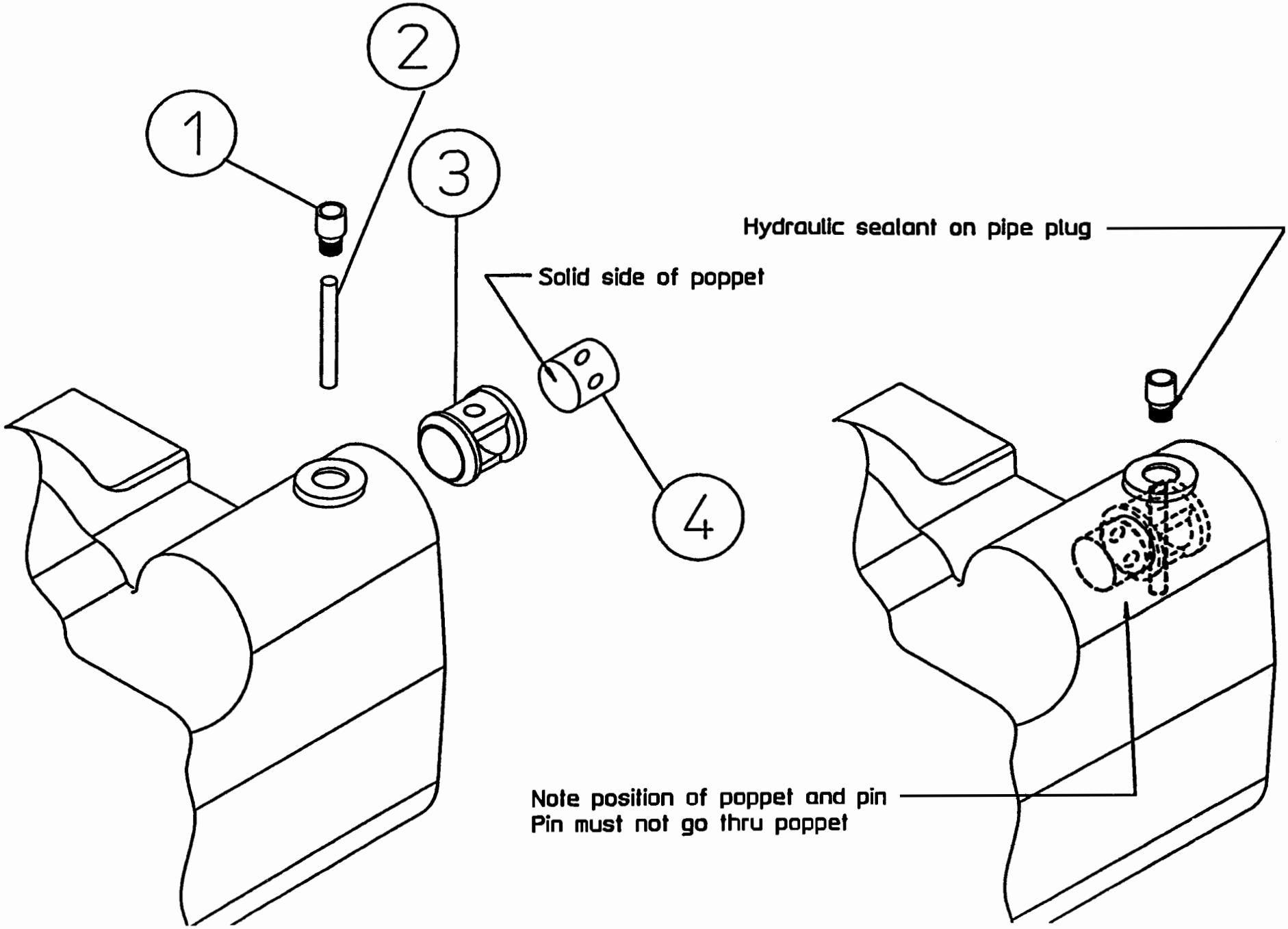
1
2
3
4
Solid side of poppet
Hydraulic sealant on pipe plug
Note position of poppet and pin
Pin must not go thru poppet

PERMCO®

CHANGING ROTATION ON ALL PERMCO DIRECT MOUNT DUMP PUMPS

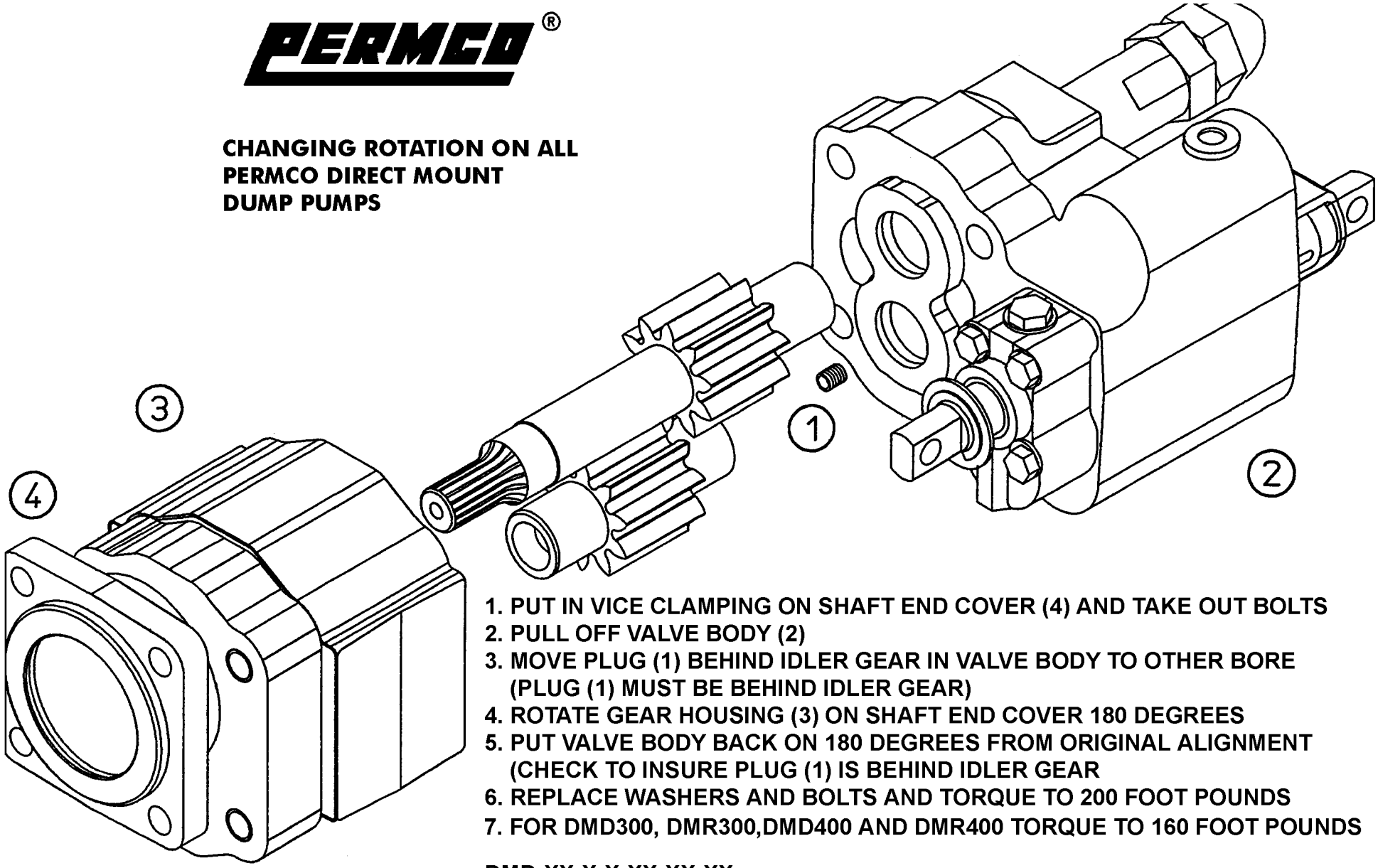

1. PUT IN VICE CLAMPING ON SHAFT END COVER (4) AND TAKE OUT BOLTS
2. PULL OFF VALVE BODY (2)
3. MOVE PLUG (1) BEHIND IDLER GEAR IN VALVE BODY TO OTHER BORE (PLUG (1) MUST BE BEHIND IDLER GEAR)
4. ROTATE GEAR HOUSING (3) ON SHAFT END COVER 180 DEGREES
5. PUT VALVE BODY BACK ON 180 DEGREES FROM ORIGINAL ALIGNMENT (CHECK TO INSURE PLUG (1) IS BEHIND IDLER GEAR
6. REPLACE WASHERS AND BOLTS AND TORQUE TO 200 FOOT POUNDS
7. FOR DMD300, DMR300,DMD400 AND DMR400 TORQUE TO 160 FOOT POUNDS

DMD-XX-X-X-XX-XX-XX

GEAR SIZE	X-2 LINE	R-RIGHT HAND	AS-AIR SHIFT	RELIEF VALVE	EXT. STUDS
(15, 20, 25)	Z-3 LINE W/SLEEVE	L-LEFT HAND	MS-MANUAL SHIFT	20-2000 PSI	E4-ALL FOUR
					ER-RIGHT SIDE
					EL-LEFT SIDE
					EB-BOTTOM TWO
					ET-TOP TWO

INSTALLATION INSTRUCTIONS FOR DUMP-PUMP FACTORY AIR-SHIFT AIR-SHIFT ASSEMBLY: 997-00863

1. REMOVE PISTON ASSEMBLY FROM COVER.
2. ENSURE THAT O"RING (1) IS IN PLACE AS SHOWN.
3. USE GREASE TO HOLD GASKET (10) IN POSITION ON VALVE BODY. (SMALL HOLE)
4. USE GREASE TO HOLD PLATE (11) IN POSITION ON GASKET.
5. USE GREASE TO HOLD GASKET (12) IN POSITION ON PLATE. (LARGE HOLE)
6. APPLY A SMALL BEAD OF LOC-TITE THREAD LOCKER TO END OF PISTON ASSEMBLY WHERE SHOWN.
7. HOLD THE PISTON ASSEMBLY (PRE-ASSEMBLED) AND SCREW THE END OF THE PISTON ASSEMBLY INTO THE END OF THE VALVE SPOOL.
8. USE A 5/16-INCH ALLEN WRENCH ON THE PISTON ASSEMBLY TO TIGHTEN (9). HOLD THE OTHER END OF THE VALVE SPOOL WHILE TIGHTENING. THIS MAY BE DONE BY PLACING A SCREW DRIVER THROUGH THE EYE-HOLE ON THE NEUTRAL LOCK-OUT SPOOL.
   NOTE: VERY LITTLE TORQUE IS NEEDED.
9. SLIP THE COVER (4) OVER THE COMPLETE SHIFT ASSEMBLY.
   INSERT THE TWO 5/16"X4" CAP SCREWS THROUGH THE MOUNTING HOLES, ON THE COVER, AND TIGHTEN EVENLY.
10. APPLY AIR PRESSURE (MIN. 75 P.S.I.) TO THE CYLINDER PORTS AND CHECK FOR AIR LEAKS, AND THAT THE AIR SHIFTER MECHANISM MOVES FREELY.

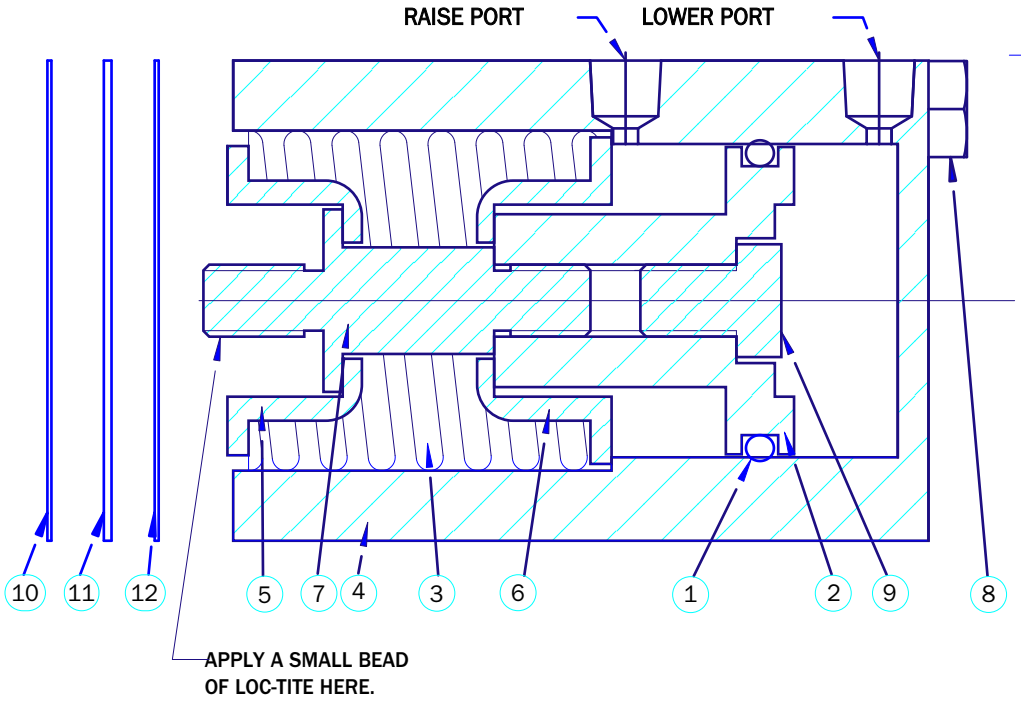

ITEM	DESCRIPTION
1	PISTON O'RING
2	PISTON
3	SPRING
4	COVER
5	FRONT RETAINER
6	REAR RETAINER
7	STUD
8	CAP SCREW (2)
9	SOCKET CAP SCREW
10	GASKET (SMALL HOLE)
11	PLATE
12	GASKET (LARGE HOLE)

NOTE: 997-00863 ASSEMBLY DOES NOT INCLUDE THE VALVE SPOOL.

Installation Instructions

997-00971A Air Shift Cylinder

PERMCO

www.permco.com

The 997-00971A Air Shift Cylinder mounts to Permco DM-640 & DMD-25 Series Pump/ Valve (as well as competitor's similar type units) in place of the detent assembly.

Disassembly

1. Using snap ring pliers, remove snap ring from valve spool.

2. Remove retaining ring from valve spool.

3. Remove detent cap, spring and ball from valve's end cap.

Assembly

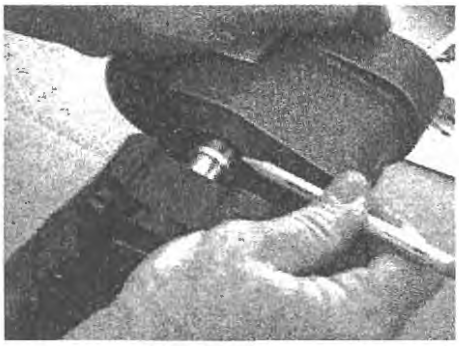

4. Remove four cap screws and slide end cap off spool. **Do not remove O-ring from valve housing.** Clean mounting face of valve housing and spool.

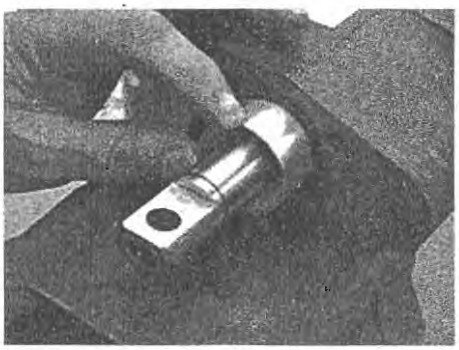

5. Place large O-ring and spring retainer over valve spool with smaller diameter hole in retainer toward valve casting. Be sure O-ring in valve housing is properly seated.

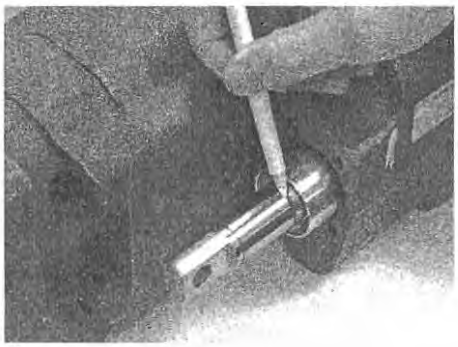

6. Apply light coating of grease to small O-ring and carefully place it into large detent groove in valve spool.

If end cap has a wiper seal, clean spool. Wrap a layer of thin, clear tape over groove to prevent seal from catching in it when you remove cap. Remove tape before installing Air Shift Kit.

1500 Frost Rd.
P.O. Box 2068
Streetsboro, Ohio 44241
330-626-2801

—Installation Instructions continued on back

Assembly, *cont. from front*

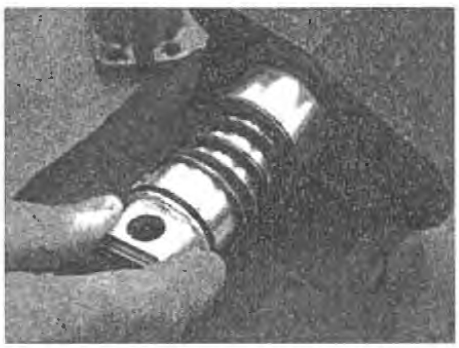

7. Hold opposite end of spool and push on piston assembly until piston hole lines up with hole in valve spool. Slide clevis pin into hole.

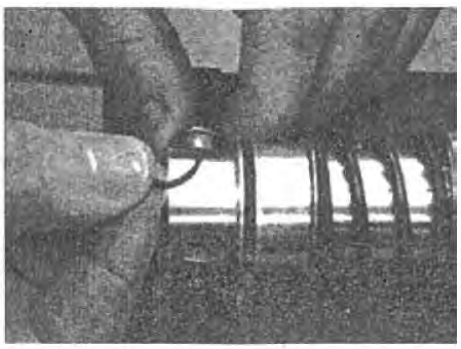

8. Apply a light coating of grease to quad seal ring. Slip snap ring onto clevis pin to secure it.

9. Slide pressure cap over assembly and push tight against valve body. Tighten cap screws finger tight. Shift spool back and forth to assure centering of air shift.

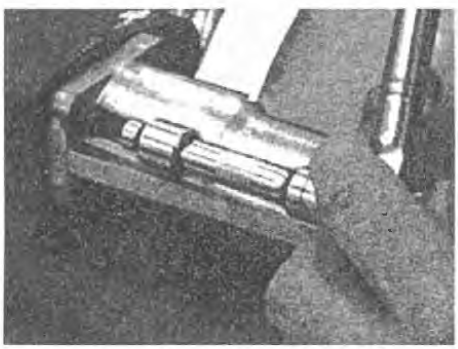

10. Alternating cross corners, torque cap screws to 24 ft. lbs.

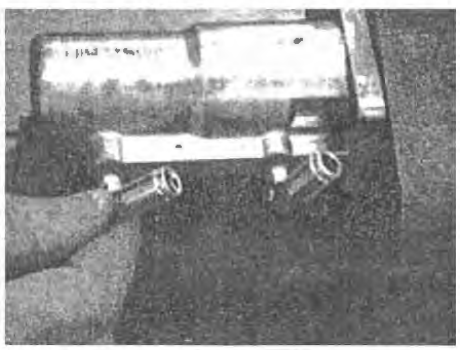

11. Install air lines from valve in cab to air cylinder.

Air in port A shifts spool to raise position.

Air in port B shifts spool to lower position.

Minimum air supply 80 psi.

An air dryer or water filter is recommended in air supply for cold weather operation.

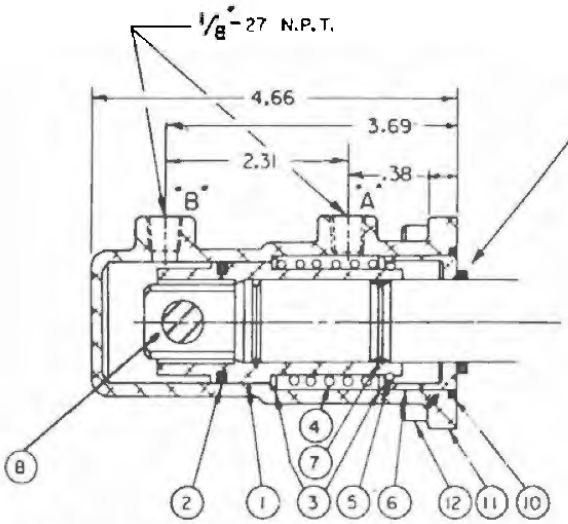

Be sure O-ring is in proper position in groove in valve housing before starting assembly.

Item	Description		Req'd
1	Piston	Piston Sub-Assembly	1
2	Quad Seal Ring		
3	Spring Retainer		
4	Spring		
5	Wire Ring		
6	Spring Retainer		1
7	O-Ring		1
8	Clevis Pin		1
9	Snap Ring		1
10	O-Ring		1
11	Pressure Cap		1
12	Cap Screw		4

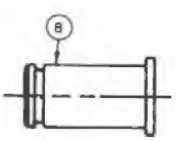

PERMCO
www.permco.com

1500 Frost Rd.
P.O. Box 2068
Streetsboro, Ohio 44241
330-626-2801

99700971AINSTR

PERMCO DMD AND DM DUMP PUMPS

PERMCO PART #	ALTERNATE PERMCO PART #'S	PARKER (COMMERCIAL) PART #
DMD-20-Z-L-MS-25	DMD-20-X-L-MS-25 + RZ-0206 IF NEEDED	* C102D-2.0-1 OR 314-9320-202
DMD-20-Z-L-AS-25	DMD-20-X-L-AS-25 + RZ-0206 IF NEEDED	* C102D-2.0-1 OR 314-9320-202 + 314-9414-017
DMD-20-Z-R-MS-25	DMD-20-X-R-MS-25 + RZ-0206 IF NEEDED	* C102D-2.0 OR 314-9320-201
DMD-20-Z-R-AS-25	DMD-20-X-R-AS-25 + RZ-0206 IF NEEDED	* C102D-2.0 OR 314-9320-201 + 314-9414-017
DMD-25-Z-L-MS-25	DMD-25-X-L-MS-25 + RZ-0206 IF NEEDED	* C102D-2.5-1 OR 314-9325-202 OR 314-9325-229
DMD-25-Z-L-AS-25	DMD-25-X-L-AS-25 + RZ-0206 IF NEEDED	* C102D-2.5-1 OR 314-9325-202 + 314-9414-017 OR 314-9325-227
DMD-25-Z-R-MS-25	DMD-25-X-R-MS-25 + RZ-0206 IF NEEDED	* C102D-2.5 OR 314-9325-201 OR 314-9325-234
DMD-25-Z-R-AS-25	DMD-25-X-R-AS-25 + RZ-0206 IF NEEDED	* C102D-2.5 OR 314-9325-201 + 314-9414-017

Z = SHIPPED WITH THREE LINE SLEEVE IF YOU STOCK THEM WITH AN "X" SIMPLY ADD PART # RZ-0206
X = SHIPPED WITHOUT THREE LINE SLEEVE
* = SHIPPED WITHOUT THREE LINE SLEEVE

DM-512-20-Z R-M-T-250	DM-640-20-X R-M-T-250 + RZ-0206 IF NEEDED	* C101D-2.0 OR 314-9310-205
DM-640-25-Z R-M-T-250	DM-640-25-X R-M-T-250 + RZ-0206 IF NEEDED	* C101D-2.5 OR 314-9310-206 OR 314-9310-226
DM-512-20-Z R-M-AS-250	DM-640-20-X R-M-AS-250 + RZ-0206 IF NEEDED	* C101D-2.0 OR 314-9310-205 + 314-9414-017
DM-640-25-Z R-M-AS-250	DM-640-25-X R-M-AS-250 + RZ-0206 IF NEEDED	* C101D-2.5 OR 314-9310-206 + 314-9414-017

Z = SHIPPED WITH THREE LINE SLEEVE IF YOU STOCK THEM WITH AN "X" SIMPLY ADD PART # RZ-0206
X = SHIPPED WITHOUT THREE LINE SLEEVE
* = SHIPPED WITHOUT THREE LINE SLEEVE

RZ-0206	THREE LINE SLEEVE FOR DMD & DM	391-3283-052
997-00971A	AIR SHIFT CYLINDER FOR DMD & DM	314-9414-017
D-0931	DM MOUNTING BRACKET	E1042 OR 314-0100-005

IF YOU DO NOT HAVE AN AIR SHIFT PUMP ON THE SHELF SIMPLY USE THE LEVER SHIFT AND ADD AIR SHIFT PART #
PARKER THREE LINE SLEEVE PART # 391-3283-052 WILL NOT INTERCHANGE WITH PERMCO DMD OR DM PUMPS
THERE ARE MANY OPTIONS TO DUMP PUMP PART NUMBERS. CONSULT THE FACTORY FOR THOSE NOT LISTED

DM-640

DMD-25

PERMCO DMD AND DM DUMP PUMPS

PERMCO PART #	ALTERNATE PERMCO PART #'S	MUNCIE PART #
DMD-20-Z -L-MS-25	DMD-20-X -L-MS-25 + RZ-0206 IF NEEDED	E2 XL23-2BPRL OR E3 XL23-2BPRL OR E2 XL1-23-02BPRL OR E3 XL1-23-02BPRL
DMD-20-Z -L-AS-25	DMD-20-X -L-AS-25 + RZ-0206 IF NEEDED	E2 XA23-2BPRL OR E3 XA23-2BPRL OR E2 XA1-23-02BPRL OR E3 XA1-23-02BPRL
DMD-20-Z -R-MS-25	DMD-20-X -R-MS-25 + RZ-0206 IF NEEDED	E2 XL23-2BPRR OR E3 XL23-2BPRR OR E2 XL1-23-02BPRR OR E3 XL1-23-02BPRR
DMD-20-Z -R-AS-25	DMD-20-X -R-AS-25 + RZ-0206 IF NEEDED	E2 XA23-2BPRR OR E3 XA23-2BPRR OR E2 XA1-23-02BPRR OR E3 XA1-23-02BPRR
DMD-25-Z -L-MS-25	DMD-25-X -L-MS-25 + RZ-0206 IF NEEDED	E2 XL27-2BPRL OR E3 XL27-2BPRL OR E2 XL1-27-02BPRL OR E3 XL1-27-02BPRL
DMD-25-Z -L-AS-25	DMD-25-X -L-AS-25 + RZ-0206 IF NEEDED	E2 XA27-2BPRL OR E3 XA27-2BPRL OR E2 XA1-27-02BPRL OR E3 XA1-27-02BPRL
DMD-25-Z -R-MS-25	DMD-25-X -R-MS-25 + RZ-0206 IF NEEDED	E2 XL27-2BPRR OR E3 XL27-2BPRR OR E2 XL1-27-02BPRR OR E3 XL1-27-02BPRR
DMD-25-Z -R-AS-25	DMD-25-X -R-AS-25 + RZ-0206 IF NEEDED	E2 XA27-2BPRR OR E3 XA27-2BPRR OR E2 XA1-27-02BPRR OR E3 XA1-27-02BPRR

Z = SHIPPED WITH THREE LINE SLEEVE IF YOU STOCK THEM WITH AN "X" SIMPLY ADD PART # RZ-0206
X = SHIPPED WITHOUT THREE LINE SLEEVE
2 = SHIPPED WITHOUT THREE LINE SLEEVE
3 = SHIPPED WITH THREE LINE SLEEVE

DM-512-20-Z R-M-T-250	DM-640-20-X R-M-T-250 + RZ-0206 IF NEEDED	E2 BL23-1RPRB OR E3 BL23-1RPRB OR E2 BL1-23-01RPRB OR E3 BL1-23-01RPRB
DM-640-25-Z R-M-T-250	DM-640-25-X R-M-T-250 + RZ-0206 IF NEEDED	E2 BL27-1RPRB OR E3 BL27-1RPRB OR E2 BL1-27-01RPRB OR E3 BL1-27-01RPRB
DM-512-20-Z R-M-AS-250	DM-640-20-X R-M-AS-250 + RZ-0206 IF NEEDED	E2 BA23-1RPRB OR E3 BA23-1RPRB OR E2 BA1-23-01RPRB OR E3 BA1-23-01RPRB
DM-640-25-Z R-M-AS-250	DM-640-25-X R-M-AS-250 + RZ-0206 IF NEEDED	E2 BA27-1RPRB OR E3BA27-1RPRB OR E2 BA1-27-01RPRB OR E3 BA1-27-01RPRB

Z = SHIPPED WITH THREE LINE SLEEVE IF YOU STOCK THEM WITH AN "X" SIMPLY ADD PART # RZ-0206
X = SHIPPED WITHOUT THREE LINE SLEEVE
2 = SHIPPED WITHOUT THREE LINE SLEEVE
3 = SHIPPED WITH THREE LINE SLEEVE

RZ-0206	THREE LINE SLEEVE FOR DMD & DM	AA1257 (THREE LINE SLEEVE)
997-00971A	AIR SHIFT CYLINDER FOR DMD & DM	ACKM-100M (AIR CYLINDER)
D-0931	DM MOUNTING BRACKET	B1235

IF YOU DO NOT HAVE AN AIR SHIFT PUMP ON THE SHELF SIMPLY USE THE LEVER SHIFT AND ADD AIR SHIFT PART #
MUNCIE THREE LINE SLEEVE PART # AA1257 WILL NOT INTERCHANGE WITH PERMCO DMD OR DM PUMPS
THERE ARE MANY OPTIONS TO DUMP PUMP PART NUMBERS. CONSULT THE FACTORY FOR THOSE NOT LISTED

DM-640

DMD-25

PERMCO DMD AND DM DUMP PUMPS

PERMCO PART #	ALTERNATE PERMCO PART #'S	TYRONE (CHELSEA) PART #	LIST PRICE
DMD-20-Z -L-MS-25	DMD-20-X -L-MS-25 + RZ-0206 IF NEEDED	* T102AX-20-L-25	
DMD-20-Z -L-AS-25	DMD-20-X -L-AS-25 + RZ-0206 IF NEEDED	* T102AX-20-A-25	
DMD-20-Z -R-MS-25	DMD-20-X -R-MS-25 + RZ-0206 IF NEEDED	* T102CX-20-L-25	
DMD-20-Z -R-AS-25	DMD-20-X -R-AS-25 + RZ-0206 IF NEEDED	* T102CX-20-A-25	
DMD-25-Z -L-MS-25	DMD-25-X -L-MS-25 + RZ-0206 IF NEEDED	* T102AX-25-L-25	
DMD-25-Z -L-AS-25	DMD-25-X -L-AS-25 + RZ-0206 IF NEEDED	* T102AX-25-A-25	
DMD-25-Z -R-MS-25	DMD-25-X -R-MS-25 + RZ-0206 IF NEEDED	* T102CX-25-L-25	
DMD-25-Z -R-AS-25	DMD-25-X -R-AS-25 + RZ-0206 IF NEEDED	* T102CX-25-A-25	

Z = SHIPPED WITH THREE LINE SLEEVE IF YOU STOCK THEM WITH AN "X" SIMPLY ADD PART # RZ-0206
X = SHIPPED WITHOUT THREE LINE SLEEVE
* = SHIPPED WITHOUT THREE LINE SLEEVE

DM-512-20-Z R-M-T-250	DM-640-20-X R-M-T-250 + RZ-0206 IF NEEDED	* T101DB -20-L-25	
DM-640-25-Z R-M-T-250	DM-640-25-X R-M-T-250 + RZ-0206 IF NEEDED	* T101DB -25-L-25	
DM-512-20-Z R-M-AS-250	DM-640-20-X R-M-AS-250 + RZ-0206 IF NEEDED	* T101DB -20-A-25	
DM-640-25-Z R-M-AS-250	DM-640-25-X R-M-AS-250 + RZ-0206 IF NEEDED	* T101DB -25-A-25	

Z = SHIPPED WITH THREE LINE SLEEVE IF YOU STOCK THEM WITH AN "X" SIMPLY ADD PART # RZ-0206
X = SHIPPED WITHOUT THREE LINE SLEEVE
* = SHIPPED WITHOUT THREE LINE SLEEVE
B = SHIPPED WITH MOUNTING BRACKET AN "X" IN THIS LOCATION REPRESENTS SHIPPED WITHOUT MOUNTING BRACKET

RZ-0206	THREE LINE SLEEVE FOR DMD & DM	16487	
997-00971A	AIR SHIFT CYLINDER FOR DMD & DM	16670	
D-0931	DM MOUNTING BRACKET	33845	

IF YOU DO NOT HAVE AN AIR SHIFT PUMP ON THE SHELF SIMPLY USE THE LEVER SHIFT AND ADD AIR SHIFT PART #
TYRONE THREE LINE SLEEVE PART # 16487 WILL NOT INTERCHANGE WITH PERMCO DMD OR DM PUMPS
THERE ARE MANY OPTIONS TO DUMP PUMP PART NUMBERS. CONSULT THE FACTORY FOR THOSE NOT LISTED

DM-640

DMD-25

Exploded View

THE PARTS IN THE TOP ROW ARE USED FOR A DIRECT MOUNT ASSEMBLY. THESE PARTS ARE LABELLED WITH AN (*) IN THE PARTS LIST.

NOTE: SLEEVE FOR 3-LINE OPERATION NOT SHOWN

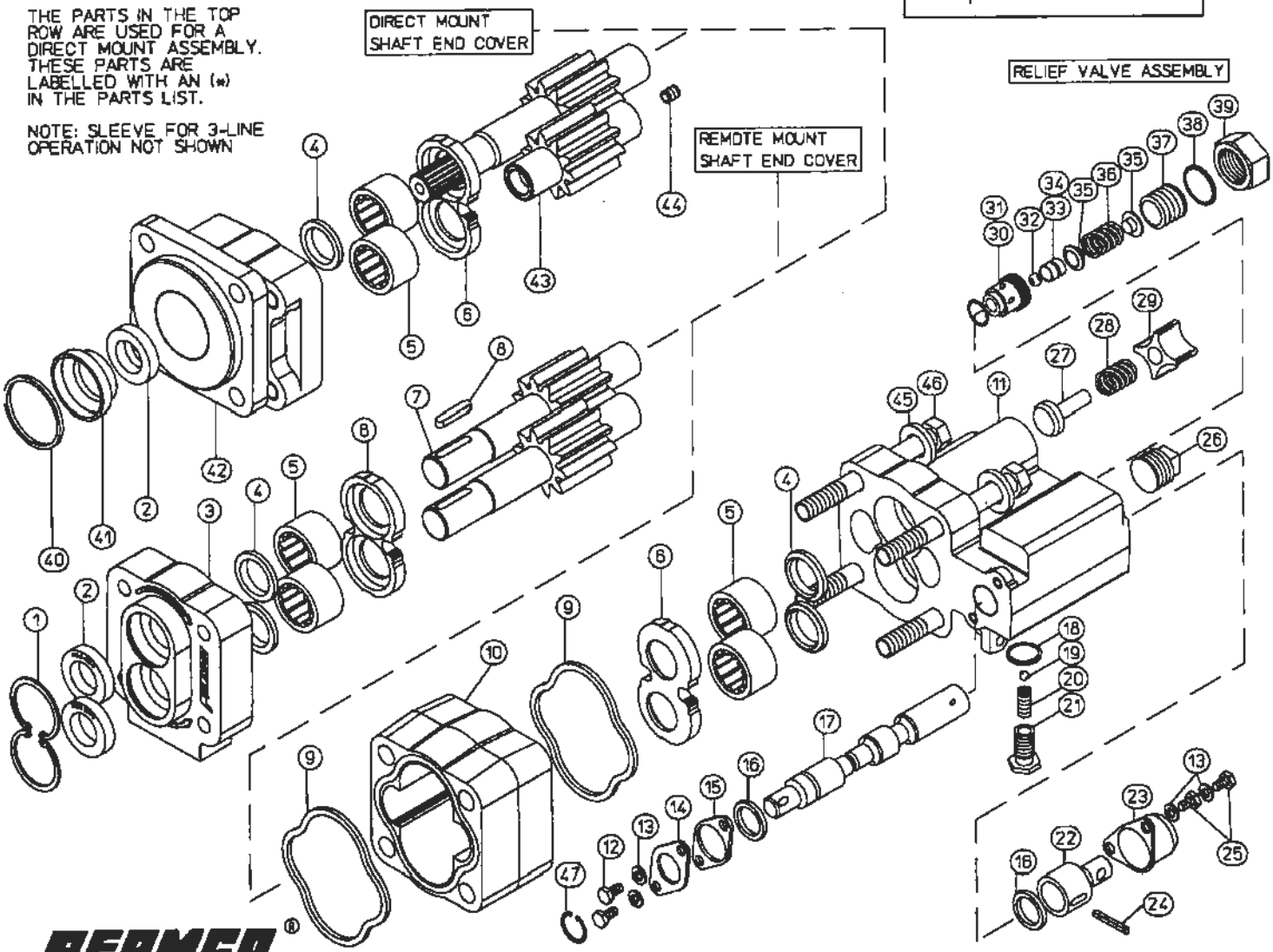

PERMCO®
Permco Inc., P.O. 2068, 1500 frost Road, Streetsboro, OH 44241-0869
Phone:(330) 626-2801 FAX:(330) 626-2805

PARTS BREAKDOWN FOR REMOTE MOUNT DMR-300-15-XL-200

ITEM	PART NO.	DESCRIPTION	QTY		ITEM	PART NO.	DESCRIPTION	QTY
1	400-00694	SNAP RING	2		24	400-00693	ROLL PIN	1
2	W62-49-400	SEAL SAME AS W62-49-9	2		25	400-00695	1/4-20 X 3/8" CAP SCREW	2
3	400-00461	DMR SHAFT END COVER	1		26	W0-38-2	3/4" NPT MALE PLUG	1
4	KA-0558-1XS	RING SEAL	4		27	400-00752	LOAD CHECK	1
5	X-0921	ROLLER BEARING	4		28	400-00753	LOAD CHECK SPRING	1
6	ZZ-0947-TC	THRUST PLATE	2		29	400-01312	LOAD DROP CHECK RETAINER	1
7	024-00364-15	GEAR SET 1" DIA. KEYED	1		30	400-00864	RELIEF VALVE BALL SEAT	1
8	W09-02	1/4 X 3/8 X 1-1/4 KEY	1		31	400-00867	RELIEF VALVE O-RING	1
9	K-2995-240	HOUSING GASKETS	2		32	400-00705	RELIEF VALVE BALL	1
10	400-00577-15	GEAR HOUSING	1		33	400-00684	BALL RETAINER	1
11	400-00462	VALVE HOUSING	1		34	400-00719	BALL RETAINER O-RING	1
12	W1-0	1/4-20 X 1/2" CAP SCREW	2		35	400-00699	RELIEF VALVE SPRING RETAINER	2
13	400-00689	1/4" LOCK WASHER	4		36	400-00688	RELIEF VALVE SPRING	1
14	400-00622	SEAL RETAINER	1		37	400-00691	SPRING HOUSING	1
15	400-00680	SEAL RETAINER SPACER	1		38	400-00838	COMPRESSION WASHER	1
16	Q-2995-7	O-RING	2		39	400-00994	RELIEF VALVE CAP	1
17	400-00583	SPOOL	1		45	W033-3	9/16" WASHER	4
18	400-00712	DETENT O-RING	1		46	W1-300	9/16-12 4-1/2" CAP SCREW	4
19	400-00861	DETENT BALL	1		47	400-00718	SPOOL RETAINER RING	1
20	640-00520-SPR	DETENT SPRING	1		48	Z-1967-45-9	PERMCO NAME TAG	1
21	400-00717	DETENT CAP	1		49	#30	3/4" PLASTIC PLUG	1
22	400-00584	SPOOL EYE	1		50	#53	1-1/4" PLASTIC PLUG	1
23	400-00623	LOCKOUT RETAINER	1		51	SP-1000-3	PLASTIC SHAFT PROTECTOR	1

NOTE: PART NO.'S 48, 49, 50, 51 NOT ON DRAWING

PARTS BREAKDOWN FOR REMOTE MOUNT DMR-400-20-XL-200

ITEM	PART NO.	DESCRIPTION	QTY		ITEM	PART NO.	DESCRIPTION	QTY
1	400-00694	SNAP RING	2		24	400-00693	ROLL PIN	1
2	W62-49-400	SEAL SAME AS W62-49-9	2		25	400-00695	1/4-20 X 3/8" CAP SCREW	2
3	400-00461	DMR SHAFT END COVER	1		26	W0-38-2	3/4" NPT MALE PLUG	1
4	KA-0558-1XS	RING SEAL	4		27	400-00752	LOAD CHECK	1
5	X-0921	ROLLER BEARING	4		28	400-00753	LOAD CHECK SPRING	1
6	ZZ-0947-TC	THRUST PLATE	2		29	400-01312	LOAD DROP CHECK RETAINER	1
7	024-00364-20	GEAR SET 1" DIA. KEYED	1		30	400-00864	RELIEF VALVE BALL SEAT	1
8	W09-02	1/4 X 3/8 X 1-1/4 KEY	1		31	400-00867	RELIEF VALVE O-RING	1
9	K-2995-240	HOUSING GASKETS	2		32	400-00705	RELIEF VALVE BALL	1
10	400-00577-20	GEAR HOUSING	1		33	400-00684	BALL RETAINER	1
11	400-00462	VALVE HOUSING	1		34	400-00719	BALL RETAINER O-RING	1
12	W1-0	1/4-20 X 1/2" CAP SCREW	2		35	400-00699	RELIEF VALVE SPRING RETAINER	2
13	400-00689	1/4" LOCK WASHER	4		36	400-00688	RELIEF VALVE SPRING	1
14	400-00622	SEAL RETAINER	1		37	400-00691	SPRING HOUSING	1
15	400-00680	SEAL RETAINER SPACER	1		38	400-00838	COMPRESSION WASHER	1
16	Q-2995-7	O-RING	2		39	400-00994	RELIEF VALVE CAP	1
17	400-00583	SPOOL	1		45	W033-3	9/16" WASHER	4
18	400-00712	DETENT O-RING	1		46	W1-400	9/16-12-5" CAP SCREW	4
19	400-00861	DETENT BALL	1		47	400-00718	SPOOL RETAINER RING	1
20	640-00520-SPR	DETENT SPRING	1		48	Z-1967-45-8	PERMCO NAME TAG	1
21	400-00717	DETENT CAP	1		49	#30	3/4" PLASTIC PLUG	1
22	400-00584	SPOOL EYE	1		50	#53	1-1/4" PLASTIC PLUG	1
23	400-00623	LOCKOUT RETAINER	1		51	SP-1000-3	PLASTIC SHAFT PROTECTOR	1

NOTE: PART NO.'S 48, 49, 50, 51 NOT ON DRAWING

PARTS BREAKDOWN FOR DIRECT MOUNT DMD-300-15-XL-200

ITEM	PART NO.	DESCRIPTION	QTY		ITEM	PART NO.	DESCRIPTION	QTY
2	W62-49-400	SEAL SAME AS W62-49-9	1		29	400-01312	LOAD DROP CHECK RETAINER	1
4	KA-0558-1XS	RING SEAL	3		30	400-00864	RELIEF VALVE BALL SEAT	1
5	X-0921	ROLLER BEARING	4		31	400-00867	RELIEF VALVE O-RING	1
6	ZZ-0947-TC	THRUST PLATE	2		32	400-00705	RELIEF VALVE BALL	1
9	K-2995-240	HOUSING GASKETS	2		33	400-00684	BALL RETAINER	1
10	400-00577-15	GEAR HOUSING	1		34	400-00719	BALL RETAINER O-RING	1
11	400-00462	VALVE HOUSING	1		35	400-00699	RELIEF VALVE SPRING RETAINER	2
12	W1-0	1/4-20 X 1/2" CAP SCREW	2		36	400-00688	RELIEF VALVE SPRING	1
13	400-00689	1/4" LOCK WASHER	4		37	400-00691	SPRING HOUSING	1
14	400-00622	SEAL RETAINER	1		38	400-00838	COMPRESSION WASHER	1
15	400-00680	SEAL RETAINER SPACER	1		39	400-00994	RELIEF VALVE CAP	1
16	Q-2995-7	O-RING	2		40	W023-206	SNAP RING	1
17	400-00583	SPOOL	1		41	400-00682	BEARING SPACER	1
18	400-00712	DETENT O-RING	1		42	574-00663	SHAFT END COVER 4-BOLT-B	1
19	400-00861	DETENT BALL	1		43	AC-0024L-1-15	GEAR SET B-SPLINE	1
20	640-00520-SPR	DETENT SPRING	1		44	400-00720	VALVE BODY PLUG	1
21	400-00717	DETENT CAP	1		45	W033-3	9/16" WASHER	4
22	400-00584	SPOOL EYE	1		46	W1-300	9/16-12 4-1/2" CAP SCREW	4
23	400-00623	LOCKOUT RETAINER	1		47	400-00718	SPOOL RETAINER RING	1
24	400-00693	ROLL PIN	1		48	Z-1967-45-7	PERMCO NAME TAG	1
25	400-00695	1/4-20 X 3/8" CAP SCREW	2		49	#30	3/4" PLASTIC PLUG	1
26	W0-38-2	3/4" NPT MALE PLUG	1		50	#53	1-1/4" PLASTIC PLUG	1
27	400-00752	LOAD CHECK	1		51	SP-1000-8	PLASTIC SHAFT PROTECTOR	1
28	400-00753	LOAD CHECK SPRING	1					

NOTE: PART NO.'S 48, 49, 50, 51 NOT ON DRAWING

PARTS BREAKDOWN FOR DIRECT MOUNT DMD-400-20-XL-200

ITEM	PART NO.	DESCRIPTION	QTY		ITEM	PART NO.	DESCRIPTION	QTY
2	W62-49-400	SEAL SAME AS W62-49-9	1		29	400-01312	LOAD DROP CHECK RETAINER	1
4	KA-0558-1XS	RING SEAL	3		30	400-00864	RELIEF VALVE BALL SEAT	1
5	X-0921	ROLLER BEARING	4		31	400-00867	RELIEF VALVE O-RING	1
6	ZZ-0947-TC	THRUST PLATE	2		32	400-00705	RELIEF VALVE BALL	1
9	K-2995-240	HOUSING GASKETS	2		33	400-00684	BALL RETAINER	1
10	400-00577-20	GEAR HOUSING	1		34	400-00719	BALL RETAINER O-RING	1
11	400-00462	VALVE HOUSING	1		35	400-00699	RELIEF VALVE SPRING RETAINER	2
12	W1-0	1/4-20 X 1/2" CAP SCREW	2		36	400-00688	RELIEF VALVE SPRING	1
13	400-00689	1/4" LOCK WASHER	4		37	400-00691	SPRING HOUSING	1
14	400-00622	SEAL RETAINER	1		38	400-00838	COMPRESSION WASHER	1
15	400-00680	SEAL RETAINER SPACER	1		39	400-00994	RELIEF VALVE CAP	1
16	Q-2995-7	O-RING	2		40	W023-206	SNAP RING	1
17	400-00583	SPOOL	1		41	400-00682	BEARING SPACER	1
18	400-00712	DETENT O-RING	1		42	574-00663	SHAFT END COVER 4-BOLT-B	1
19	400-00861	DETENT BALL	1		43	AC-0024L-1-20	GEAR SET B-SPLINE	1
20	640-00520-SPR	DETENT SPRING	1		44	400-00720	VALVE BODY PLUG	1
21	400-00717	DETENT CAP	1		45	W033-3	9/16" WASHER	4
22	400-00584	SPOOL EYE	1		46	W1-400	9/16-12-5" CAP SCREW	4
23	400-00623	LOCKOUT RETAINER	1		47	400-00718	SPOOL RETAINER RING	1
24	400-00693	ROLL PIN	1		48	Z-1967-45-2	PERMCO NAME TAG	1
25	400-00695	1/4-20 X 3/8" CAP SCREW	2		49	#30	3/4" PLASTIC PLUG	1
26	W0-38-2	3/4" NPT MALE PLUG	1		50	#53	1-1/4" PLASTIC PLUG	1
27	400-00752	LOAD CHECK	1		51	SP-1000-8	PLASTIC SHAFT PROTECTOR	1
28	400-00753	LOAD CHECK SPRING	1					

NOTE: PART NO.'S 48, 49, 50, 51 NOT ON DRAWING

Installation Instructions
PERMCO #400-AS

Prepare Valve for Installation:

1. Refer to figure 1 on page 2 for proper valve preparation instructions.
2. Make sure that valve spool and valve face are free of any foreign particles.

Prepare Cylinder for Installation

1. Remove the two 5/16-18 cap screws from rear of cylinder. This will disassemble cylinder into 3 pieces:
    a.) Mounting Bracket with Socket head Cap screw
    b.) Cylinder Body Assembly with O-Ring
    c.) Rear Cover Plate with O-Ring

Installation of Cylinder: (Refer to Figure 2 on page 3)

1. Slide bracket over shaft with recess of bracket facing pump. Make sure O-Ring seat is in recess of bracket. Attach to pump with (2) socket head cap screws using a 3/16" hex wrench.
2. Rotate pump shaft to align hole in shaft with the setscrew located inside the middle air port of the cylinder body. Slide cylinder body assembly over shaft.
3. Secure to pump by screwing setscrew through pump shaft using 5/32" hex wrench, tighten firmly.
4. Place rear cover plate with o-ring onto end of cylinder body and install cap screws, torque to 10 ft/lbs.
5. Test alignment of cylinder by removing pipe plug from rear cover, inserting a 3/16" hex wrench through cover and rotating shaft clockwise. Shaft should rotate freely. Replace pipe plug using a thread sealant.

Permco 400-AS, Rev. A
Approved 1-14-05
Ken Thompson, kc

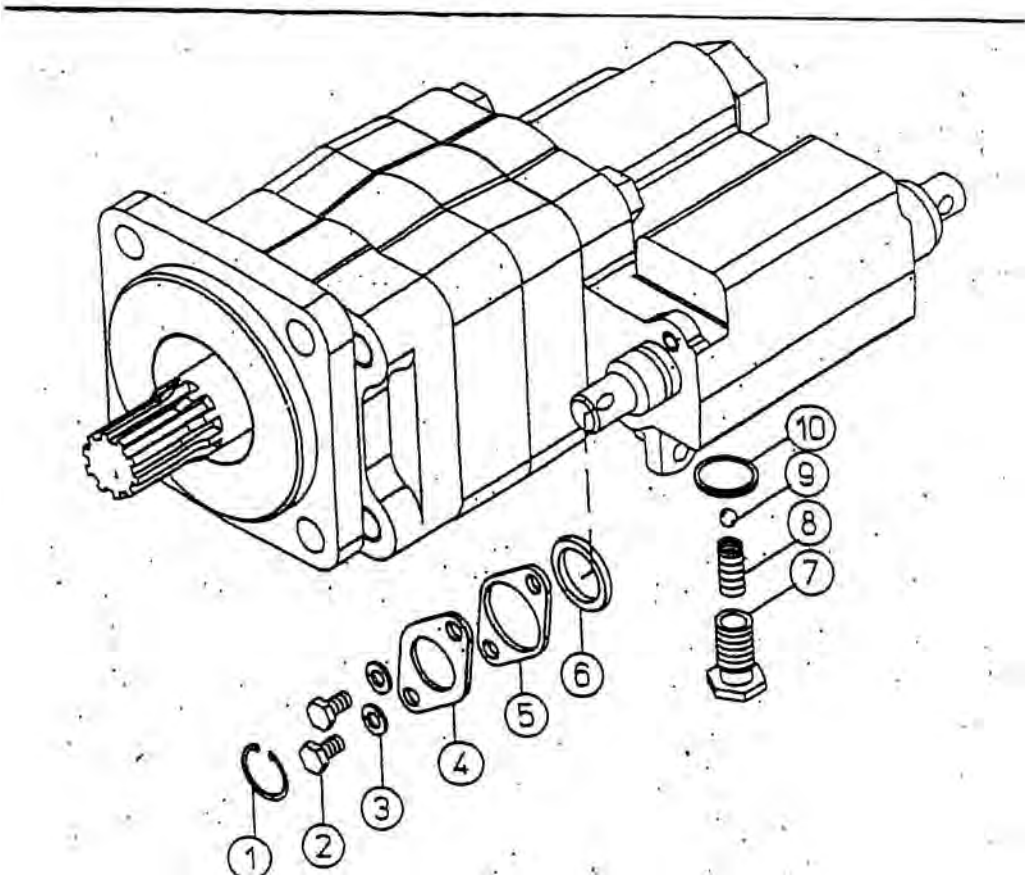

Figure 1: Valve Preparation

1. It is extremely important that the pump is UPSIDE DOWN (SEE ATTACHED DRAWING). Upside down is the position that the detent is facing downwards. FAILURE TO DO THIS MAY CAUSE THE DETENT BALL TO FALL WITHIN THE VALVE HOUSING AND MOVE INTO THE ROTATING GROUP CAUSING PREMATURE FAILURE!
2. With the pump in the downward position, loosen the plug (7) with an 11/16 wrench and remove the detent assembly (8 & 9).
3. Detent spring and ball will fall straight down and out of pump.
4. Re-insert the plug with o-ring.
5. It should be noted that you will also remove 1 through 6 when attaching the air shift. Air shift kit (400-AS) should include new o-ring (6).

HYDRAULIC / PNEUMATIC PRODUCTS

1500 Frost Road • Post Office Box 2068 • Streetsboro, Ohio 44241-0869 • 330/626-2801 • Fax: 330/626-2805

To: All Permco Distributors **Date: January 1, 1990**

Subject: DM 400 SERIES DUMP PUMP AIR SHIFT INSTALLATION

INSTRUCTIONS FOR INSTALLING AIR SHIFT TO DM400

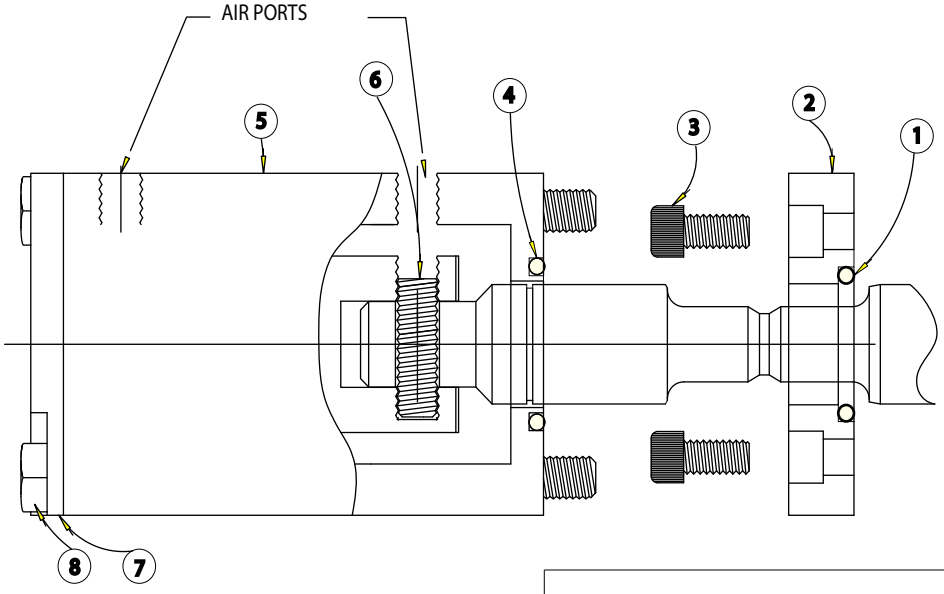

PART NO.	DESCRIPTION	QTY.
1	SMALL O'RING	1
2	O'RING RETAINER	1
3	1/4x20 CAP SCREW	2
4	LARGE O'RING	1
5	CYLINDER BODY	1
6	SET SCREW	1
7	COVER PLATE	1
8	5/16x18 CAP SCREW	2

1-Place small o'ring (1) in groove in o'ring retainer plate (2).
2-Bolt retainer plate (2) to pump with o'ring (1) against pump with cap screws (3).
3-Place larger o'ring (4) in cylinder body (5).
4-Screw set screw (6) thru the piston and spool.
5-Bolt assembly to retainer plate with long cap screws (8).

PERMCO DMD-DMR 300 AND 400 DUMP PUMPS

PERMCO PART #	ALTERNATE PERMCO PART #'S	PARKER (COMMERCIAL) PART #	LIST PRICE
DMD-300-15-Z L-200	DMD-300-15-X L-200 + 400-00870 IF NEEDED	* G102-1-1.5L-4S OR 308-9310-075	
DMD-300-15-Z R-200	DMD-300-15-X R-200 + 400-00870 IF NEEDED	* G102-1-1.5R-4S OR 308-9310-071	
DMD-300-15-Z L-200-AS	DMD-300-15-X L-200-AS + 400-00870 IF NEEDED	* G102-1-1.5L-4S OR 308-9310-075 + 308-9414-049	
DMD-300-15-Z R-200-AS	DMD-300-15-X R-200-AS + 400-00870 IF NEEDED	* G102-1-1.5R-4S OR 308-9310-071 + 308-9414-049	
DMD-400-20-Z L-200	DMD-400-20-X L-200 + 400-00870 IF NEEDED	* G102-1-2.0L-4S OR 308-9310-077 OR 308-9310-418	
DMD-400-20-Z R-200	DMD-400-20-X R-200 + 400-00870 IF NEEDED	* G102-1-2.0R-4S OR 308-9310-073 OR 308-9310-416	
DMD-400-20-Z L-200-AS	DMD-400-20-X L-200-AS + 400-00870 IF NEEDED	* G102-1-2.0L-4S OR 308-9310-077 + 308-9414-049 OR 308-9310-903	
DMD-400-20-Z R-200-AS	DMD-400-20-X R-200-AS + 400-00870 IF NEEDED	* G102-1-2.0R-4S OR 308-9310-073 + 308-9414-049	

Z = SHIPPED WITH THREE LINE SLEEVE IF YOU STOCK THEM WITH AN "X" SIMPLY ADD PART # 400-00870
X = SHIPPED WITHOUT THREE LINE SLEEVE
* = SHIPPED WITHOUT THREE LINE SLEEVE

DMR-300-15-Z L-200	DMR-300-15-X L-200 + 400-00870 IF NEEDED	* G101-1-1.5 OR 308-9310-003	
DMR-400-20-Z L-200	DMR-400-20-X L-200 + 400-00870 IF NEEDED	* G101-1-2.0 OR 308-9310-005 OR 308-9310-047	
DMR-300-15-Z L-200-AS	DMR-300-15-X L-200-AS + 400-00870 IF NEEDED	* G101-1-1.5 OR 308-9310-003 + 308-9414-049	
DMR-400-20-Z L-200-AS	DMR-400-20-X L-200-AS + 400-00870 IF NEEDED	* G101-1-2.0 OR 308-9310-005 + 308-9414-049	

Z = SHIPPED WITH THREE LINE SLEEVE IF YOU STOCK THEM WITH AN "X" SIMPLY ADD PART # 400-00870
X = SHIPPED WITHOUT THREE LINE SLEEVE
* = SHIPPED WITHOUT THREE LINE SLEEVE

400-00870	THREE LINE SLEEVE FOR DM AND DR DUMP PUMPS	391-3283-052	
AS-400	AIR SHIFT FOR DM AND DR DUMP PUMPS	308-9414-049	

IF YOU DO NOT HAVE AN AIR SHIFT PUMP ON THE SHELF SIMPLY USE THE LEVER SHIFT AND ADD AIR SHIFT PART #
PARKER THREE LINE SLEEVE PART # 391-3283-052 WILL NOT INTERCHANGE WITH PERMCO DMD OR DMR PUMPS
PARKER AIR SHIFT PART # 308-9414-049 WILL NOT INTERCHANGE AND/OR MOUNT TO PERMCO DMD OR DMR DUMP PUMPS
THERE ARE MANY OPTIONS TO DUMP PUMP PART NUMBERS. CONSULT THE FACTORY FOR THOSE NOT LISTED

DMR-400

DMD-400

PERMCO DMD-DMR 300 AND 400 DUMP PUMPS

PERMCO PART #	ALTERNATE PERMCO PART #'S	MUNCIE PART #	LIST PRICE
DMD-300-15-Z L-200	DMD-300-15-X L-200 + 400-00870 IF NEEDED	S2 LD-11-2BPRL OR S3 LD-11-2BPRL	
DMD-300-15-Z R-200	DMD-300-15-X R-200 + 400-00870 IF NEEDED	S2 LD-11-2BPRR OR S3 LD-11-2BPRR	
DMD-300-15-Z L-200-AS	DMD-300-15-X L-200-AS + 400-00870 IF NEEDED	S2 AD-11-2BPRL OR S3 AD-11-2BPRL	
DMD-300-15-Z R-200-AS	DMD-300-15-X R-200-AS + 400-00870 IF NEEDED	S2 AD-11-2BPRR OR S3 AD-11-2BPRR	
DMD-400-20-Z L-200	DMD-400-20-X L-200 + 400-00870 IF NEEDED	S2 LD-15-2BPRL OR S3 LD-15-2BPRL	
DMD-400-20-Z R-200	DMD-400-20-X R-200 + 400-00870 IF NEEDED	S2 LD-15-2BPRR OR S3 LD-15-2BPRR	
DMD-400-20-Z L-200-AS	DMD-400-20-X L-200-AS + 400-00870 IF NEEDED	S2 AD-15-2BPRL OR S3 AD-15-2BPRL	
DMD-400-20-Z R-200-AS	DMD-400-20-X R-200-AS + 400-00870 IF NEEDED	S2 AD-15-2BPRR OR S3 AD-15-2BPRR	

Z = SHIPPED WITH THREE LINE SLEEVE IF YOU STOCK THEM WITH AN "X" SIMPLY ADD PART # 400-00870
X = SHIPPED WITHOUT THREE LINE SLEEVE
2 = SHIPPED WITHOUT THREE LINE SLEEVE
3 = SHIPPED WITH THREE LINE SLEEVE

DMR-300-15-Z L-200	DMR-300-15-X L-200 + 400-00870 IF NEEDED	S2 LD-11-1RPRB OR S3 LD-11-1RPRB	
DMR-400-20-Z L-200	DMR-400-20-X L-200 + 400-00870 IF NEEDED	S2 LD-15-1RPRB OR S3 LD-15-1RPRB	
DMR-300-15-Z L-200-AS	DMR-300-15-X L-200-AS + 400-00870 IF NEEDED	S2 AD-11-1RPRB OR S3 AD-11-1RPRB	
DMR-400-20-Z L-200-AS	DMR-400-20-X L-200-AS + 400-00870 IF NEEDED	S2 AD-15-1RPRB OR S3 AD-15-1RPRB	

Z = SHIPPED WITH THREE LINE SLEEVE IF YOU STOCK THEM WITH AN "X" SIMPLY ADD PART # 400-00870
X = SHIPPED WITHOUT THREE LINE SLEEVE
2 = SHIPPED WITHOUT THREE LINE SLEEVE
3 = SHIPPED WITH THREE LINE SLEEVE

400-00870	THREE LINE SLEEVE FOR DM AND DR DUMP PUMPS	AA1257	
AS-400	AIR SHIFT FOR DM AND DR DUMP PUMPS	NO MUNCIE PART #	

IF YOU DO NOT HAVE AN AIR SHIFT PUMP ON THE SHELF SIMPLY USE THE LEVER SHIFT AND ADD AIR SHIFT PART #
MUNCIE THREE LINE SLEEVE PART # AA1257 WILL NOT INTERCHANGE WITH PERMCO DMD OR DMR PUMPS
MUNCIE AIR SHIFT PART # ACM400 WILL NOT INTERCHANGE AND/OR MOUNT TO PERMCO DMD OR DMR DUMP PUMPS
THERE ARE MANY OPTIONS TO DUMP PUMP PART NUMBERS. CONSULT THE FACTORY FOR THOSE NOT LISTED

DMR-400

DMD-400

HYDRAULIC / PNEUMATIC PRODUCTS
1500 Frost Road · Post Office Box 2068 · Streetsboro, Ohio 44241-0869 · 330/626-2801 · Fax: 330/626-2805

To: All Permco Distributors **Service Bulletin 022902** **Date: July 1, 2001**

Subject: ADJUSTING THE DPR* (DUAL PRESSURE RELIEF)

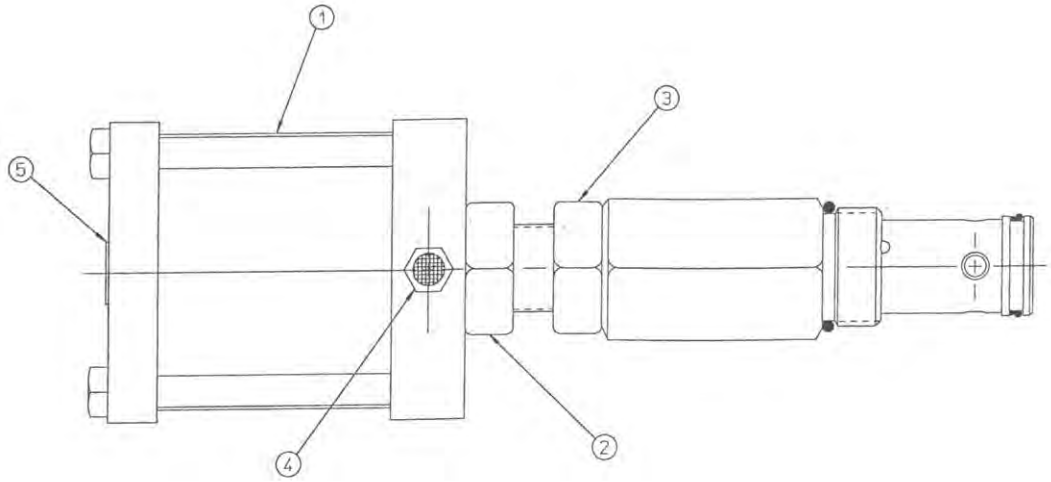

The relief valve comes preset at the factory for 2500 PSI and 3200 PSI. The lower setting is to be used for dump trailer applications and the high setting for live floor trailers. To change between the low and high setting, air pressure is induced via port 5. With a minimum of approximately 60 PSI air at this port, the relief valve setting will change to 3200 PSI. Without pressure at port 5, the unit reverts to the low-pressure setting.

Although it is not recommended, should you desire to adjust these pressures settings in the field, the following must be done. The setting should be made with a pressure gage in the line. All rotations written below are made looking at the air inlet of the cylinder. Changing the low-pressure setting interacts with the high-pressure set point. In essence if you reduce the low-pressure setting by 500 PSI, the high-pressure setting will be reduced by approximately the same amount. Increasing the setting will have the same effect: increasing the low-pressure setting will increase the high-pressure setting. Changing the high-pressure setting **WILL NOT** affect the low-pressure set point.

TO ADJUST THE LOW-PRESSURE SETTING
Loosen nut 3. To increase setting, turn the entire cylinder assembly clockwise. To reduce the setting, turn the cylinder assembly counter clockwise. When you have achieved your desired setting, seat (tighten) nut 3 tightly against the relief valve body.

TO ADJUST THE HIGH-PRESSURE SETTING
Loosen nut 2. To increase setting, turn the entire cylinder assembly clockwise. To reduce the setting, turn the cylinder assembly counter clockwise. When you have achieved your desired setting, seat (tighten) nut 2 tightly against the cylinder body.

*Patent Pending

HYDRAULIC / PNEUMATIC PRODUCTS
1500 Frost Road · Post Office Box 2068 · Streetsboro, Ohio 44241-0869 · 330/626-2801 · Fax: 330/626-2805

To: All Permco Distributors **Date: July 1, 2001**

Subject: Gemini System and Console Operation (997-01226-8)

Gemini System Operation

The Gemini System is a single hydraulic system with the ability to run at two different operating pressures, depending on the application at hand. The primary uses are for fleets that do both dump operations and walking floor operations. Gemini al lows you to set the pressure relief at a high level (3200 PSI) for walking floor (or other high pressure systems) and at a lower pressure (2500 PSI) for dump applications (or other lower pressure applications).
The system is simpler than previous dual application systems, as it utilizes a dump pump, so the pump, valve and relief are in one unit, thus avoiding remote valves, relief and extra hoses.

Console Operations

With the Gemini Console you have four controls that operate the system.
You can operate the following devices:

1. Power Take-off
2. Dump Trailer Hoist (feathering valve)
3. Relief pressure settings
4. Dump trailer air controlled rear tailgate

A. Dump Operation

1. After hooking up the trailer hoses, engage the PTO (upper L/H Valve). Light will come on when engaged.
2. The upper R/H valve with the light (off) will already be in the 2500 PSI mode.
   If the light is on (illuminated) it means the pressure is set at 3200 PSI and the switch needs to be set to 2500 PSI, the light off indicates you are in the low PSI mode.
3. The dump tailgate valve, in the lower R/H of the console should be engaged and the light will come on.
4. Finally, to dump use the long handle cylinder feathering valve on the lower L/H side of the console.

B. Live Floor Operation

1. After hooking up the trailer connections, set the pressure valve (upper R/H) to the high position (3200 PSI), the tailgate function should be in the closed position.
2. Engage the PTO (upper L/H valve).
3. Engage lower L/H valve to full detent (up) to engage the live floor. To turn the flow to trailer off shift the valve back to center (neutral).

Electrical Hook-ups:

A. Battery (Positive).
B. PTO switch on shifter.
C. Ground in cab (in case the bolts holding tower down, do not ground tower).

Air Hook-ups:

1. Air inlet (from pressure protection valve).
2. To bed down side of air cylinder on Gemini Pump.
3. To bed up side of air cylinder on Gemini Pump.
4. To air cylinder on PTO.
5. To tailgate closed end of air cylinder on tailgate.
6. To tailgate open end of air cylinder on tailgate.
7. To end of air cylinder on relief valve on Gemini Pump.

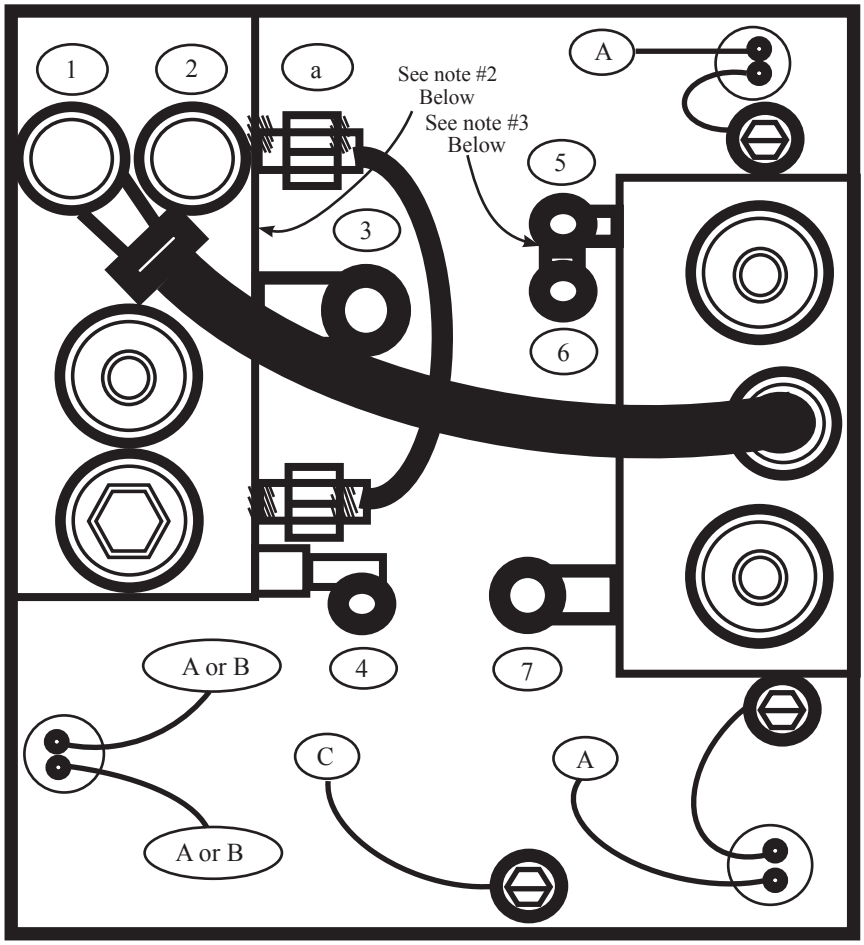

Note: Gemini Air Tower (Bottom View) (997-01226-8)

1. To disengage PTO kick-out, remove hose from tting (a) and push plastic plug (supplied) into tting (a). Allow short connecting hose to remain open.
2. To adjust detent, remove top plate and insert allen wrench in the small holes provided in the side of the dump valve section of the Gemini air tower assembly and turn clockwise to make stiffer or counterclockwise to make easier or eliminate altogether.
3. If tailgate is not used, plug 5 and 6 seperately. DO NOT LOOP TOGETHER.

REVISION DATE: September 1, 2005 ©

Copyright © 2006 Permco

HYDRAULIC / PNEUMATIC PRODUCTS
1500 Frost Road · Post Office Box 2068 · Streetsboro, Ohio 44241-0869 · 330/626-2801 · Fax: 330/626-2805

To: All Permco Distributors **Date: July 27, 2006**

Subject: Gemini Air Cylinder Sub-Assembly # 997-01199

QTY	NUMBER	PERMCO PART #	DESCRIPTION	MATERIAL
2	12	997-01199-12	109 SPLIT BACKUP, SPRING GUIDE	ALUMINUM
1	11	997-01199-11	ADJUSTMENT SCREW, 7/8-14 UNF-2A	STEEL
2	10	997-01199-10	CYLINDER HOUSING SEAL	RUBBER
4	9	997-01199-9	5/16-18 UNC x 3-1/2" BOLT	STEEL
1	8	997-01199-8	END CAP, 1/4• NPT REAR	ALUMINUM
1	7	997-01199-7	END CAP, 7/8-14 UNF-2B, 1/4" NPT SIDE	ALUMINUM
1	6	997-01199-6	TUBE, 2-1/2" BORE	ALUMINUM
1	5	997-01199-5	330 O-RING, PISTON	BUNA
1	4	997-01199-4	PISTON	ALUMINUM
1	3	997-01199-3	SPRING, LEF PN LHL-1000D-1	MUSIC WIRE
1	2	997-01199-2	109 O-RING, SPRING GUIDE	BUNA
1	1	997-01199-1	SPRING GUIDE, O-RING RETAINER	STEEL

HYDRAULIC / PNEUMATIC PRODUCTS
1500 Frost Road • Post Office Box 2068 • Streetsboro, Ohio 44241-0869 • 330/626-2801 • Fax: 330/626-2805

To: All Permco Distributors **Date: July 21, 2006**

Subject: GEMINI RELIEF VALVE

ASSEMBLY PART # 997-01202

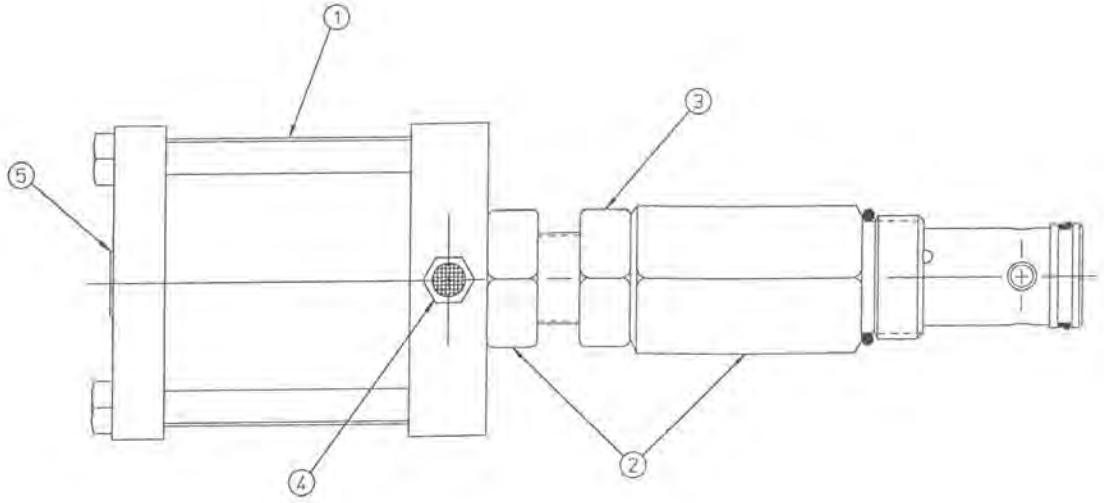

QTY	NUMBER	PERMCO PART NUMBER	DESCRIPTION
1	5	#11	PLASTIC PLUG 1/4" NPT
1	4	514--01301	BREATHER VENT
1	3	900-01200	SEALING LOCKNUT 7/8-14 UNF-2B
1	2	RP-5514-DP	MAIN RELIEF ASSEMBLY
1	1	997-01199	AIR CYLINDER ASSEMBLY

Installation and Operation Instructions for the 997-01444

***Application*:**
Permco's new dual-purpose air tower is designed to operate combination hydraulic systems.

Installation:
See page two for plumbing and wiring diagram.

***Console functions*:**

1. Power take-off (Indicator light is wired to PTO to indicate PTO engaged)
2. Hoist
3. Relief pressure settings
4. Automatic default to low pressure for relief valve. (When PTO disengages the relief valve will always reset to low pressure setting.)

1. **Operation of a standard dump application (low pressure)**:
    a. Hook up trailer hoses
    b. Engage the PTO (LED will come on while the PTO is engaged)
    c. Operate the hoist control as needed
    d. The PTO will automatically disengage when the hoist control is in the lower position(optional manual disengagement is)*
2. **Operation of live floor/high pressure application**:
    a. Hook up trailer hoses
    b. To set the pressure to high, pull the high pressure spool valve. This will change your system to high pressure. The high pressure light will come on.
    c. Engage the PTO(LED will come on when PTO is engaged)
    d. To begin operation move hoist control into raise position
    e. To return to standard pressure, shut off the high pressure valve.
        1) This can be done by manually disengaging the valve.
        2) Shutting the PTO off.
        3) By putting the hoist control into the lower position (when the automatic PTO kick out feature is being utilized)*.

**Automatic kick out of PTO can be converted to manual operation by removing "tee" fitting "A" from valve fitting "B". See picture on page 2. When using this option the PTO remains engaged until operator disengages. Accordingly the relief valve when set to high will remain until either PTO disengaged or operator shuts off high pressure.*

NOTE: Follow all pump instructions for operation. Hydraulic relief settings recommended by the pump manufacturer should be strictly followed. Not following the hydraulic pump manufacturer's relief setting recommendations could result in significant system damage and /or failure.

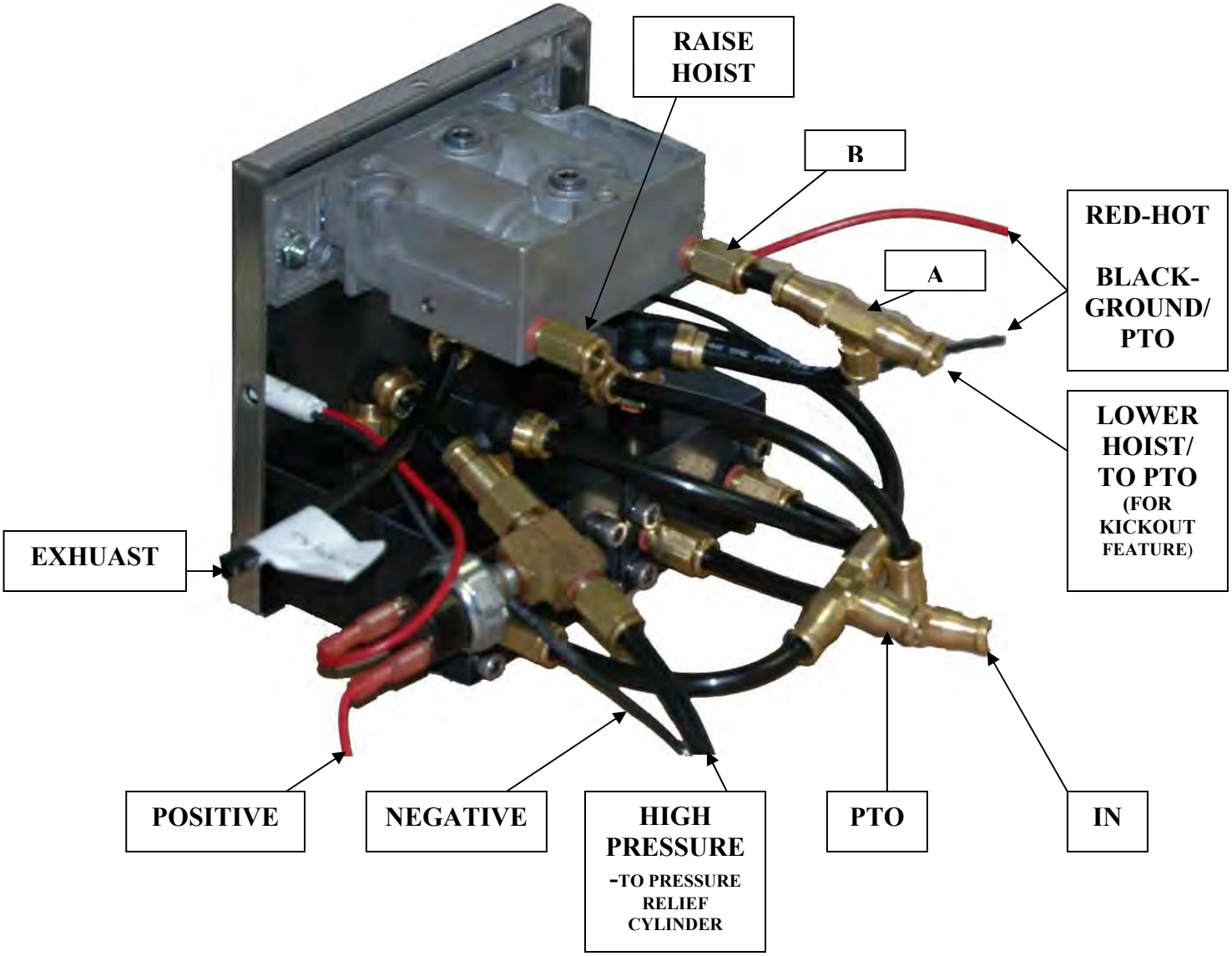
RAISE HOIST
B
A
RED-HOT
BLACK-GROUND/ PTO
LOWER HOIST/ TO PTO (FOR KICKOUT FEATURE)
EXHUAST
POSITIVE
NEGATIVE
HIGH PRESSURE -TO PRESSURE RELIEF CYLINDER
PTO
IN

Hydraulic/Pneumatic Products

1500 Frost Road - Post Office Box 2068 - Streetsboro, Ohio 44241-0869 - (330)626-2801 - Fax: (330)626-2805

To: Permco Distributors ***October 19, 2009***

Subject: PAVC-295-HP-13 Gemini Dual Pressure Console

In efforts to promote a better understanding of our PAVC-295-HP-13 tower; listed below is the instructions and hookup schematic; consult factory for additional assistance.

PAVC-295-HP-13 Dual Pressure Console

Application:

PERMCO's new dual-purpose air tower is designed to operate combination hydraulic systems

Console Functions:

1. Power Take-Off
2. Hoist
3. Relief Pressure settings

Console Installation: connect all appropriate hoses for the following applications

Main Body Valve:

- IN = Air Inlet Supply
- PTO = Power take-off
- TIP = Hoist/Raise
- LOW = Hoist/Lower
- EX = Exhaust
- OFF = Unused

Push-Pull Valve (attachment):

- (1) inlet
- (1) outlet: connect to pressure relief setting cylinder

1. Operation of a standard dump application:

a. Hook up trailer hoses.
b. Engage the power take-off (LED light will come on while the power take-off is engaged.
c. Operate the hoist control as desired. (Raise/Lower)
d. The standard console assembly will automatically disengage the power take-off in the lower position. (Note: manual disengagement is an available option upon order.)

2. Operation of a live floor/high pressure application:

a. Hook up trailer hoses.
b. To set the pressure to high, pull the high-pressure valve spool. This will change your system pressure to high. The high-pressure warning light will come on, and a chime will begin to sound.
c. Engage the power take-off (LED light will come on while the power take-off is engaged.)
d. To begin operation, move the hoist control from its neutral position to the raise position.
e. To return to standard pressure (2500 psi), shut off the high pressure valve. This will turn off the high-pressure warning light and chime.

Note: Following all pump instructions for operation. Hydraulic relief settings recommended by the pump manufacturer should be strictly followed. Not following the hydraulic pump manufacturer's relief setting recommendations could result in significant system damage and/or failure.

NFPA Solutions through motion technology

The Sensible Choice

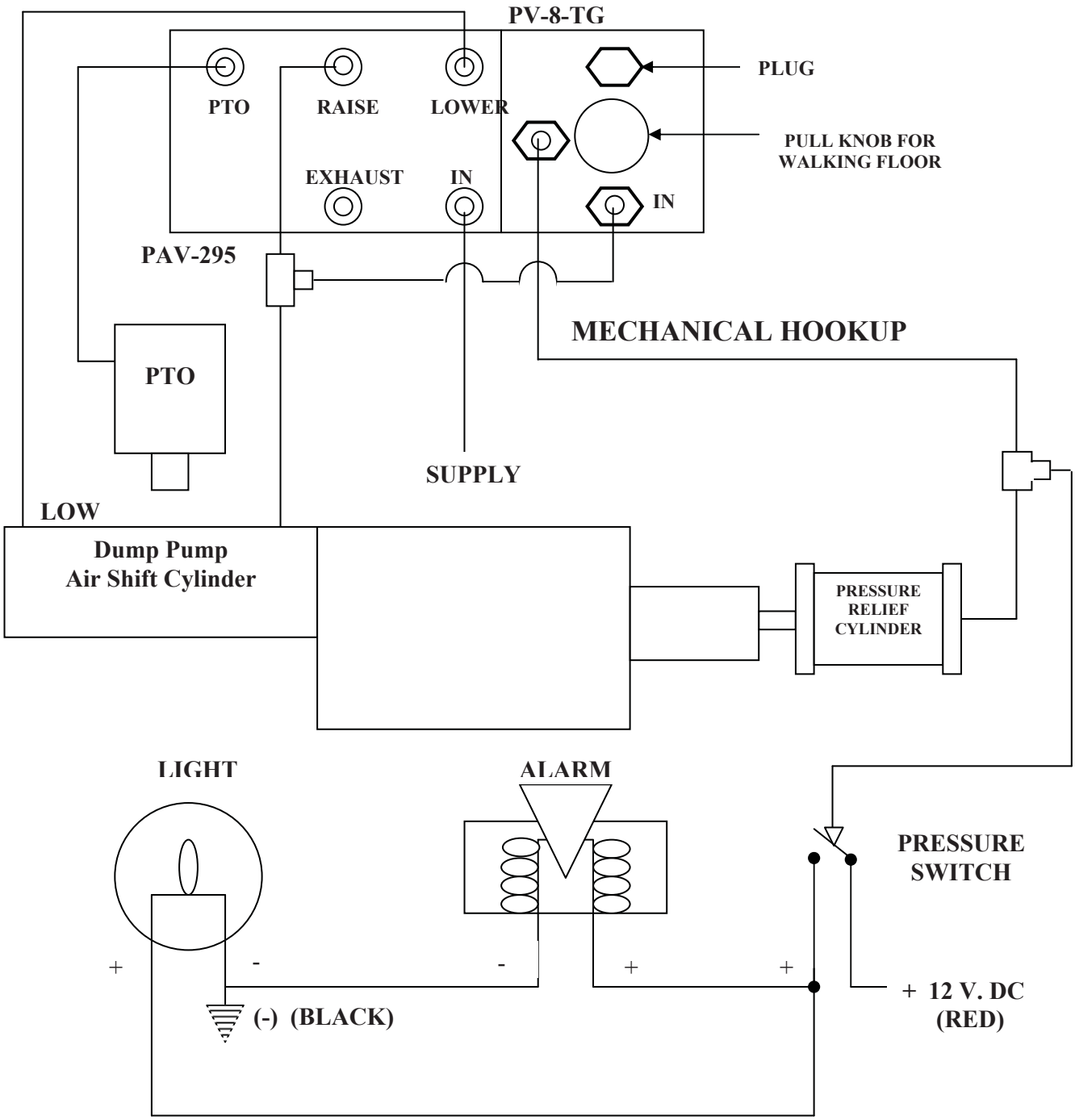

ELECTRICAL HOOKUP

PAVC-295-HP-13
2-11-09
REV. A

Typical Gemini Pump Hydraulic Circuit

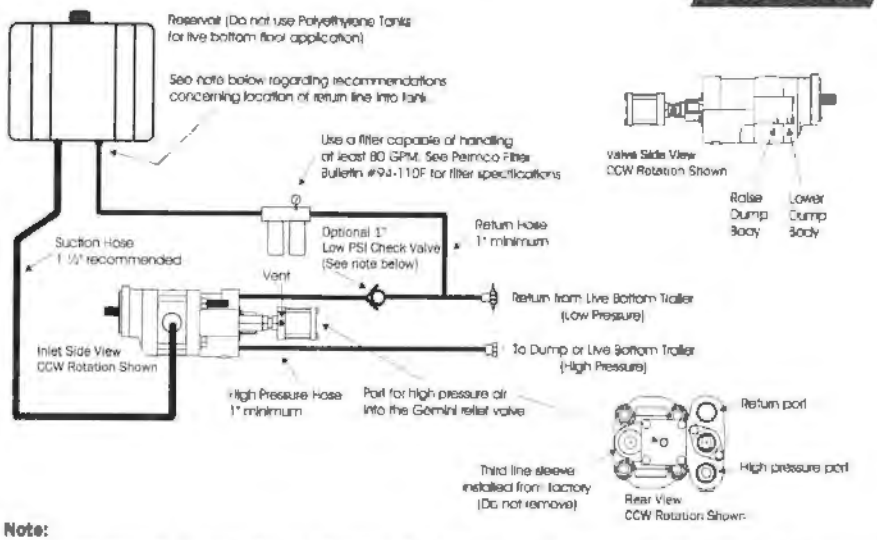

Note:

1. To prevent aeration, the return line hose must enter the tank below the fluid level by means of entering the bottom of the tank or by means of using a drop tube (stand pipe). If not you must use the optional low PSI check valve as pictured above (Raising the pressure in this line may cause the bed to raise in neutral)

Typical Gemini Pump Hydraulic Circuit (with Tank mounted on Trailer)

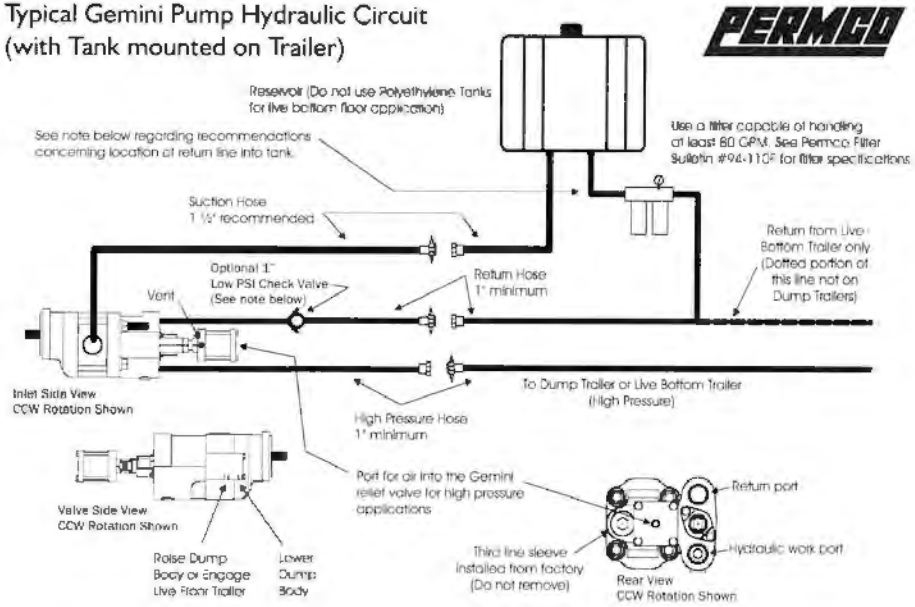

Note:

1. To prevent aeration, the return line hose must enter the tank below the fluid level by means of entering the bottom of the tank or by means of using a drop tube (stand pipe). If not you must use the optional low PSI check valve as pictured above (Raising the pressure in this line may cause the bed to raise in neutral)

HYDRAULIC/PNEUMATIC PRODUCTS
1500 Frost Road · Post Office Box 2068 · Streetsboro, Ohio 44241-0869 · 330/626-2801 · FAX: 330/626-2805

In-Line Reliefs

PART NUMBER	PORTING / OPTIONS

In-Line Relief Valves

AZ5514J-100-25	1″ NPT / 2500 PSI
AZ5514J-100-25J	1" JIC / 2500 PSI
AZ5514P-100-25	1″ NPT / 2500 PSI / PILOT OPERATED
AZ5514P-100-25J	1" JIC / 2500 PSI / PILOT OPERATED
AZ5514J-075-25	3/4″ NPT / 2500 PSI
AZ5514J-075-25J	3/4" JIC / 2500 PSI
AZ5514P-075-25	3/4" NPT / 2500 PSI / PILOT OPERATED
AZ5514P-075-25J	3/4" JIC / 2500 PSI / PILOT OPERATED
AZ5514J-075-30	3/4″ NPT / 3000 PSI
AZ2214J-075-30J	3/4" JIC / 3000 PSI
AZ5514J-100-30	1″ NPT / 3000 PSI
AZ5514J-100-30J	1" JIC / 3000 PSI
AZ5514J-100-32	1″ NPT / 3200 PSI
AZ5514J-100-32J	1" JIC / 3200 PSI

Other options available, consult factory for price and availability.

PERMCO®
HYDRAULIC / PNEUMATIC PRODUCTS
1500 Frost Road · Post Office Box 2068 · Streetsboro, Ohio 44241-0869 · 330/626-2801 · Fax: 330/626-2805

To: All Permco Distributors Date: JANUARY 14, 1987

Subject: OPERATION OF THE DRY VALVE

Dry valves (or similarly trade named valves) are coming into increasing usage, particularly in the solid waste industry. These valves are used to permit compacting while roading (on the fly), while limiting heat buildup in the hydraulic systems during transport. There are some safeguards necessary when using the valves.

A dry valve consist of an air or electrically operated shut off valve in the inlet line of the pump; usually mounted to the pump inlet port to simplify plumbing. Included in the valve is an orifice which permits sufficient fluid to pass to lubricate the pump parts when the valve is in the off (dry) mode. In some situations, a bypass flow control mounted to the pump outlet is used. The purpose of this is to re-circulate a portion of the outlet flow back to the pump inlet to prevent cavitation during high speed operation of the pump when the dry valve is open (wet) mode. This also reduces the flow rate to the compacting cylinders and thus compacting speed is not excessive preventing slamming and hammering of the compacting machinery. The compacting machinery is normally designed to operate at low pump speed which limits the rate of operation.

If, while the dry valve is closed (dry mode), pressure builds up in the discharge side of the system (above 20 PSI), the pump will be damaged. The dry valve in the off (dry) mode permits only a flow sufficient to lubricate the pump; while adequate to lubricate there is insufficient fluid to fill the pump displacement and the pump exhibits severe cavitation. No damage from this occors unless there is pressure to cause the cavities (oil droplets) to collapse. System backpressure exceeding 20 PSI will provide enough energy to collapse the cavities (oil droplets) and damage the pump.

To prevent the possibility of backpressure buildup, a small valve may be added ahead of the system control valves to bypass a small flow, 2-3 GPM. This may be a flow control, bleed valve or similar device. See DVBP Port End Cover for P5000/5100 or P7500/7600 for Permco's bleed valve used in dry valve applications.

Permco offers (2) sizes of air operated dry valves which can be mounted to the pump inlet with a 1-1/2" or 2" SAE split flange porting. This valve is similar to other manufacturers products in general configuration. Because lubrication is limited while the dry valve is being used, Permco has available special thrust plates for the 3000/3100, 2500, 3700, 5000/5100, and 7500/7600 series pumps. These plates are necessary to assure adequate pump life. The dry valve should be inspected and the orifice size checked; Permco requires and orifice of 0.104 inches. If the orifice size is less than this, it should be drilled out with a .104 drill. Be sure to deburr and clean all chips from the valve.

THRUST PLATE PART #	PUMP SERIES	THRUST PLATE PART #	PUMP SERIES
ZZ-0947-DV	3000/3100	W-0947-DV	3700
X-0947-DVS	2500, 5000/5100	AZ-0947-DVS	7500/7600

Variations of installations will be found. In some instances, only a dry valve is used. In some cases, the operator must limit engine speed while compacting and must remember to close (dry mode) the dry valve at high engine speeds. A tachometer output with associated electronics may be incorporated which will automatically perform this function. Other Installations may incorporate the flow control, the flow control and back pressure valve, or just a back pressure valve. All of these arrangements may be found.

PERMCO®
HYDRAULIC / PNEUMATIC PRODUCTS
1500 Frost Road · Post Office Box 2068 · Streetsboro, Ohio 44241-0869 · 330/626-2801 · Fax: 330/626-2805

To: All Permco Distributors Date: SEPTEMBER 15, 1990

Subject: NEW PORT END COVERS FOR DRY VALVE PUMPS

In an effort to reduce noise, simplify plumbing and improve the efficiency and the life of the dry valve pump, Permco has developed a by-pass valve that is built into the port end cover. This valve opens as the dry valve is closed to allow a reasonably unrestricted flow back to tank. It minimizes outlet back pressure that causes dry valve pumps to become noisy if cavitation is premitted to occor. Typically this back pressure is caused by downstrean restrictions in the open center valve system and the long hoses associated with return lines.

This patented design allows for approximately 2 GPM to flow directly back to tank when the pump is in the dry mode. When the pump is returned to the normal operating mode (wet mode) this valve closes to eliminate any loss of power through the bleed off of fluid. This valve, integral to the port end cover requires a 3/8" line back to tank.

Permco's system eliminates the horsepower loss associated with competitors models which allow oil to continue to flow to tank during the operating mode. Is also minimizes the back pressure that makes dry valve pumps noisy and the premature failures caused by this back pressure. These are available for the P5000/5100 and P7500/7600 dry valve pumps. This option is a net adder when ordered as an option on a dry valve pump (or port end cover) and is designated by the DVBP (Dry Valve By-Pass) at the end of the model or part number.

PART #	DESCRIPTION
YZ-0592-DVBP	P5000 DRY VALVE BY-PASS PEC
YZ-0592D-DVBP	P5100 DRY VALVE BY-PASS PEC
XZ-0592-DVBP	P7500 DRY VALVE BY-PASS PEC
XZ-0592D-DVBP	P7600 DRY VALVE BY-PASS PEC

When ordering either of the above port end cover assemblies for dry valve applications, please incorporate the following components into your pump assembly:

PART #	DESCRIPTION
ZZ-0947-DV	P3000/3100 DRY VALVE THRUST PLATE
KA-0558-DV	P3000/3100 DRY VALVE RING SEAL
X-0947-DVS	P5000/5100 DRY VALVE THRUST PLATE
MA-0558-DV	P5000/5100 DRY VALVE RING SEAL
AZ-0947-DVS	P7500/7600 DRY VALVE THRUST PLATE
VA-0558-DV	P7500/7600 DRY VALVE RING SEAL

By installing these components in your dry valve pump assembly, optimun performance is assured.

HYDRAULIC / PNEUMATIC PRODUCTS
1500 Frost Road · Post Office Box 2068 · Streetsboro, Ohio 44241-0869 · 330/626-2801 · Fax: 330/626-2805

To: All Permco Distributors **Date: MARCH 9, 1992**

Subject: P5000/5100 AND P7500/7600 SERIES DRY VALVE WITH INTEGRAL BY-PASS CONTROL

When a pump is subjected to a restricted inlet condition as in the case of units incorporating a dry valve setup, cavitation of the lubricating fluid will occur if an unrestricted path back to the oil reservoir is unavailable at the outlet of the pump. To greatly reduce the occurence of cavitation, Permco has developed a by-pass control that gives the lubrication flow a direct, unrestricted path to the hydraulic reservoir. Unlike other manufacturers controls that provide the same function, the Permco design is the only one availabe that is integral to the pump itself and provides a positive closure (shut off) when the work circuit is activated. In doing so, all flow that would have been by-passed to tank (as in the case of pressure compensated controls that bleed a given amount of flow continously through the entire work cycle), is directed to the working circuit providing full power to the system. Because the by-pass control is integral to the pump, all that is required for installation is a 3/8" diameter hose with one end connected to the 3/8" NPT port located on the side of the port end cover and the other end connected to the hydraulic reservoir.

DRY VALVE CIRCUIT SCHEMATIC WITH INTEGRAL BY-PASS CONTROL

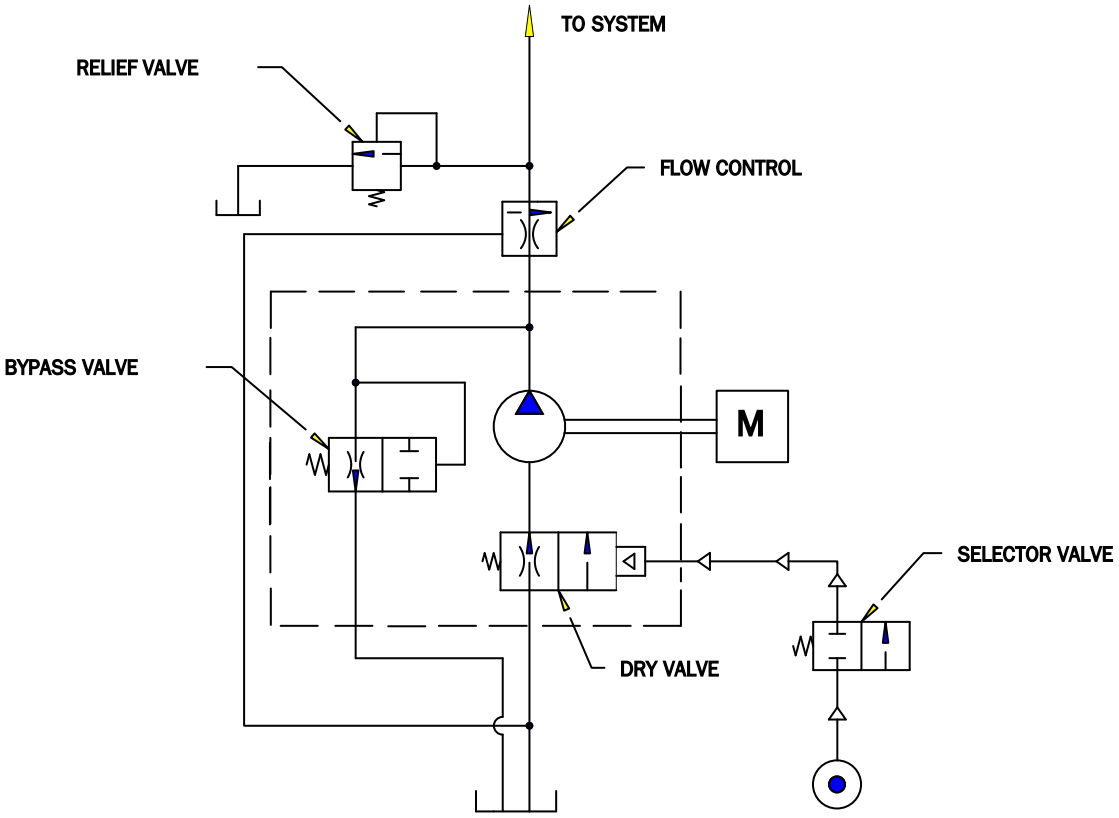

PERMCO®
HYDRAULIC / PNEUMATIC PRODUCTS
1500 Frost Road · Post Office Box 2068 · Streetsboro, Ohio 44241-0869 · 330/626-2801 · Fax: 330/626-2805

To: All Permco Distributors Date: MARCH 9, 1992

Subject: SHAFT END COVER COMPONENTS FOR DRY VALVE PUMPS

When building a dry valve pump and extra seal is needed, a dry valve pump while in the dry mode of operation creates an internal vacuum which effects the shaft seals ability to seal properly around the pump shaft, the extra seal is needed to prevent debris from entering through the shaft seal area. This seal arrangement is called a back-to-back seal and is common to all dry valve pump applications. When building dry valve pumps is should be noted that dry valve thrust plates and dry valve rings seals are required for optium performance.

NOTE: The P7500/7600 is now offered in an integral gear shaft set for SAE "C" keyed (Part # ZE-0024L-3-**).

Please refer to the diagram illustrations below to insure proper seal installation.

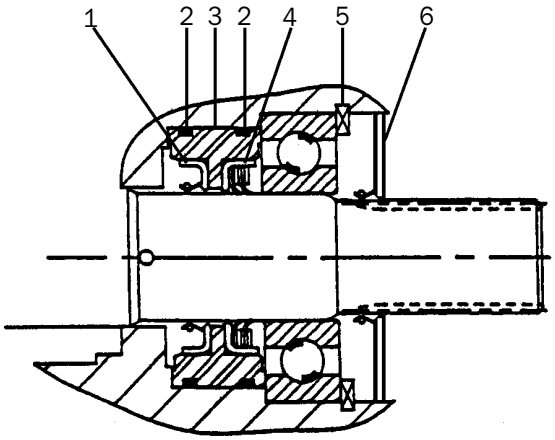

P7500/7600 INTEGRAL

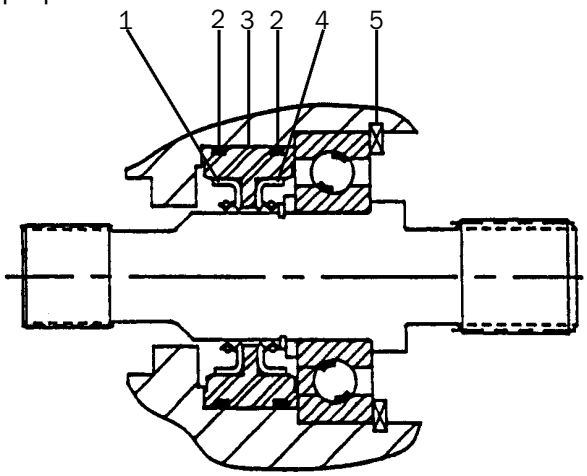

P7500/7600 CONTINENTAL

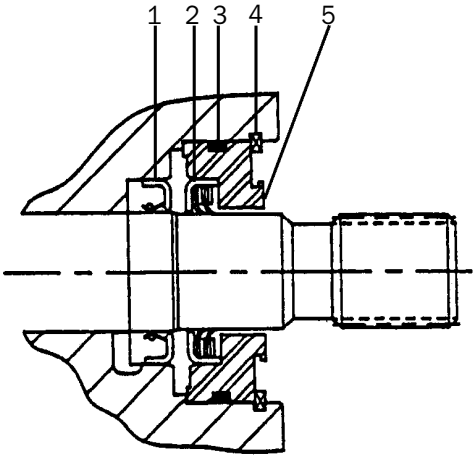

P5000/5100 INTEGRAL

P7500/7600 INTEGRAL

1.	W62-26-10	SHAFT SEAL
2.	K-2995-164	O-RING
3.	QZ-0961	SEAL RETAINER
4.	W62-49-1	OUTER SEAL
5.	W85-315	SNAP RING
6.	W62-26-75	BEARING SEAL

P7500/7600 CONTINENTAL

1.	W62-26-10	SHAFT SEAL
2.	K-2995-164	O-RING
3.	QZ-0961	SEAL RETAINER
4.	W62-26-10	OUTER SEAL
5.	W85-315	SNAP RING

P5000/5100 INTEGRAL

1.	W62-26-17	SHAFT SEAL
2.	W62-49-8	OUTER SEAL
3.	K-2995-47	O-RING
4.	W023-283	SNAP RING
5.	OZ-0961	SEAL RETAINER

HYDRAULIC / PNEUMATIC PRODUCTS
1500 Frost Road • Post Office Box 2068 • Streetsboro, Ohio 44241-0869 • 330/626-2801 • Fax: 330/626-2805

To: All Permco Distributors **Date: July 21, 2006**

Subject: NEW DRY VALVE THRUST PLATE

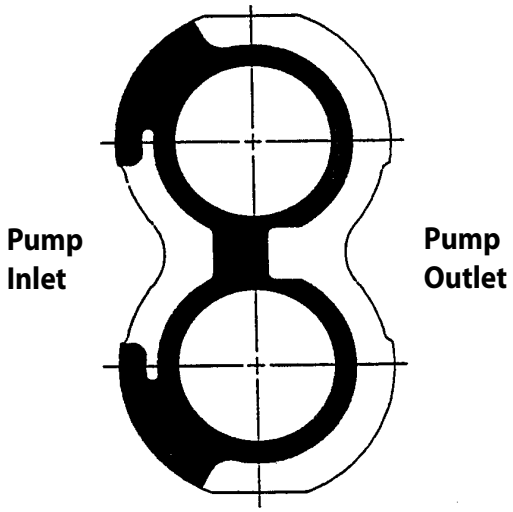

New AZ-0947-DVS 7500/7600 Series Thrust Plates

Our AZ-0947-DV 7500/7600 series thrust plate used in dry valve applications, has been superseded. Please now use thrust plate AZ-0947-DVS for all future dry valve pump needs.

The old thrust plate (AZ-0947-DV) was bi-rotational. The new AZ-0947-DVS plates are unidrectional to facilitate a better hydraulic seal between the gears and plates. This results in improved volumetric efficiency for the pump.

Both the AZ-0947-DVS (7500/7600 Series) and the X-0947-DVS (5000/5100 Series) unidrectional thrust plates will have the same orientation. Like all unidrectional thrust plates, it is very important the the new plates are oriented properly within the pump. Especially when you or your customers are repairing or retrofitting the new plates in as existing pump. Please refer to the diagram above for assistance.

If you have further questions please call any of our customer service personnel.

HYDRAULIC / PNEUMATIC PRODUCTS
1500 Frost Road · Post Office Box 2068 · Streetsboro, Ohio 44241-0869 · 330/626-2801 · Fax: 330/626-2805

To: All Permco Distributors **Date: February 25, 1998**

Subject: P7500/P7600 DRY VALVE THRUST PLATES

As you may know some time ago Permco changed the P7500/P7600 dry valve thrust plates from a bi-directional plate (AZ-0947-DV) to a unidirectional plate (AZ-0947-DVS). In a continuing effort to make our products better, Permco has initiated another change in the dry valve thrust plate.

The AZ-0947-DVS now incorporates two (2) Teflon seals (280-1774-939) which seal the plate on the roller-bearing diameter.

You must use two (2) seals for each thrust plate.

This is a running change and is effective immediately. All units presently being built will have the new style thrust plates with seals installed. Since this is a running change, we will not take back old style dry valve thrust plates. When ordering these thrust plates as parts, please be sure to order two (2) seals (280-1774-939) for each thrust plate (AZ-0947-DVS) that you order.

Please also be aware that you should never break in a dry valve pump in the dry mode. There is an inadequate amount of oil to carry the small amount of debris away and therefore the contaminants produced during break-in tend to stay in the pump and destroy it very quickly. You should therefore run it initially in the wet mode for at least one (1) minute, slowly bringing it up to the relief valve setting. This goes for a new pump built in the field or one that has simply been rebuilt. Pumps built at Permco are broken in properly on the test stand.

HYDRAULIC / PNEUMATIC PRODUCTS
1500 Frost Road · Post Office Box 2068 · Streetsboro, Ohio 44241-0869 · 330/626-2801 · Fax: 330/626-2805

To: All Permco Distributors **Date: August 7, 1998**

Subject: P7500/P7600 UNLOADER THRUST PLATES

Permco has recently developed a new front mounted pump system for the refuse industry. The VERSA-PAK pump can be built as an Unloader or Dry Valve pump. Both currently require special thrust plates.

The Unloader configuration now requires the AZ-0947-ULS single rotation unloader thrust plates. Please note the location of the trapping groove with relation to rotation. Also please note that this thrust plate requires that two (2) Teflon sealing rings be placed in the bearing pocket. This is different from the standard AZ-0947-TC and gives us an advantage of higher efficiencies and less heat in this particular application.

The AZ-0947-ULS incorporates two (2) Teflon seals (280-1774-939) which seal the thrust plate on the roller bearing diameter.

You must use two (2) seals for each thrust plate.

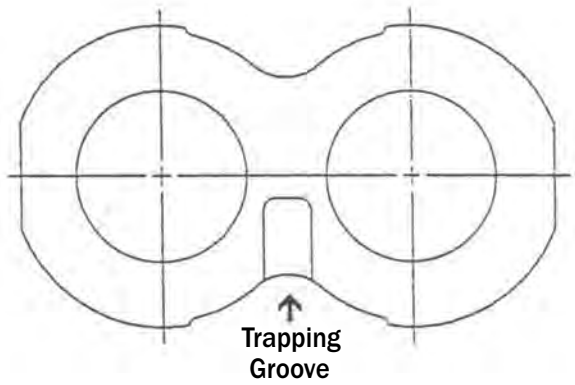

The trapping groove must be placed on the high pressure (discharge) side of the pump

This change is effective immediately; all unloader units presently being built have the new style thrust plates with seals installed. When ordering unloader thrust plates as parts, please be sure to order two (2) seals (280-1774-939) for each thrust plate (AZ-0947-ULS).

HYDRAULIC / PNEUMATIC PRODUCTS
1500 Frost Road · Post Office Box 2068 · Streetsboro, Ohio 44241-0869 · 330/626-2801 · Fax: 330/626-2805

To: All Permco Distributors **Date: May 12, 1998**

Subject: MUNCIE DRY VALVE HOUSING

With the introduction of the dry valve with the dry valve pump, many of our customers have been trying to replace the Muncie pump with Permco's P7500 or P7600 dry valve pump. During this conversion, the dry valve is usually in good condition.

To mount a Muncie dry valve (Power Pro or Power Miser) to a Permco P7500 or P7600 dry valve pump, a counterbore must be machined in the gear housing. This is a relatively easy operation whereby the Muncie dry valve bolts right up.
Permco offers gear housing machined to these specifications.

Tooling is available for both the 1-1/2" and 2" counterbore versions. A drawing is attached showing the 2" version.

Permco also offers Port Adapter Kits; this kit quickly and easily converts a Permco P7500 or P7600 dry valve pump without "counterbored" inlet port to fit a Muncie dry valve where counterboring is necessary.

See Permco Versa-Pak brochure for assembled pump units machined with Muncie counterbore.

HOUSING PART #	SERIES	PORTING SIZE	GEAR SIZE
RZ-0577-15-38MC	7500	1-1/2" X 1-1/4" SPLIT FLANGE	1-1/2"
RZ-0577-17-38MC	7500	1-1/2" X 1-1/4" SPLIT FLANGE	1-3/4"
RZ-0577-20-45MC	7500	2" X 1-1/4" SPLIT FLANGE	2"
RZ-0577-22-45MC	7500	2" X 1-1/4" SPLIT FLANGE	2-1/4"
RZ-0577-25-45MC	7500	2" X 1-1/4" SPLIT FLANGE	2-1/2"
RZ-0577-15-38DMC	7600	1-1/2" X 1-1/4" SPLIT FLANGE	1-1/2"
RZ-0577-17-38DMC	7600	1-1/2" X 1-1/4" SPLIT FLANGE	1-3/4"
RZ-0577-20-45DMC	7600	2" X 1-1/4" SPLIT FLANGE	2"
RZ-0577-22-45DMC	7600	2" X 1-1/4" SPLIT FLANGE	2-1/4"
RZ-0577-25-45DMC	7600	2" X 1-1/4" SPLIT FLANGE	2-1/2"

TOOL PART #	SIZE
165-001	1-1/2"
165-002	2"

PORT ADAPTER KIT PART #	SIZE
514-00952	1-1/2"
514-00951	2"

PORTING INSTRUCTIONS

MUNCIE DRY VALVE COUNTERBORE DIMENSIONS

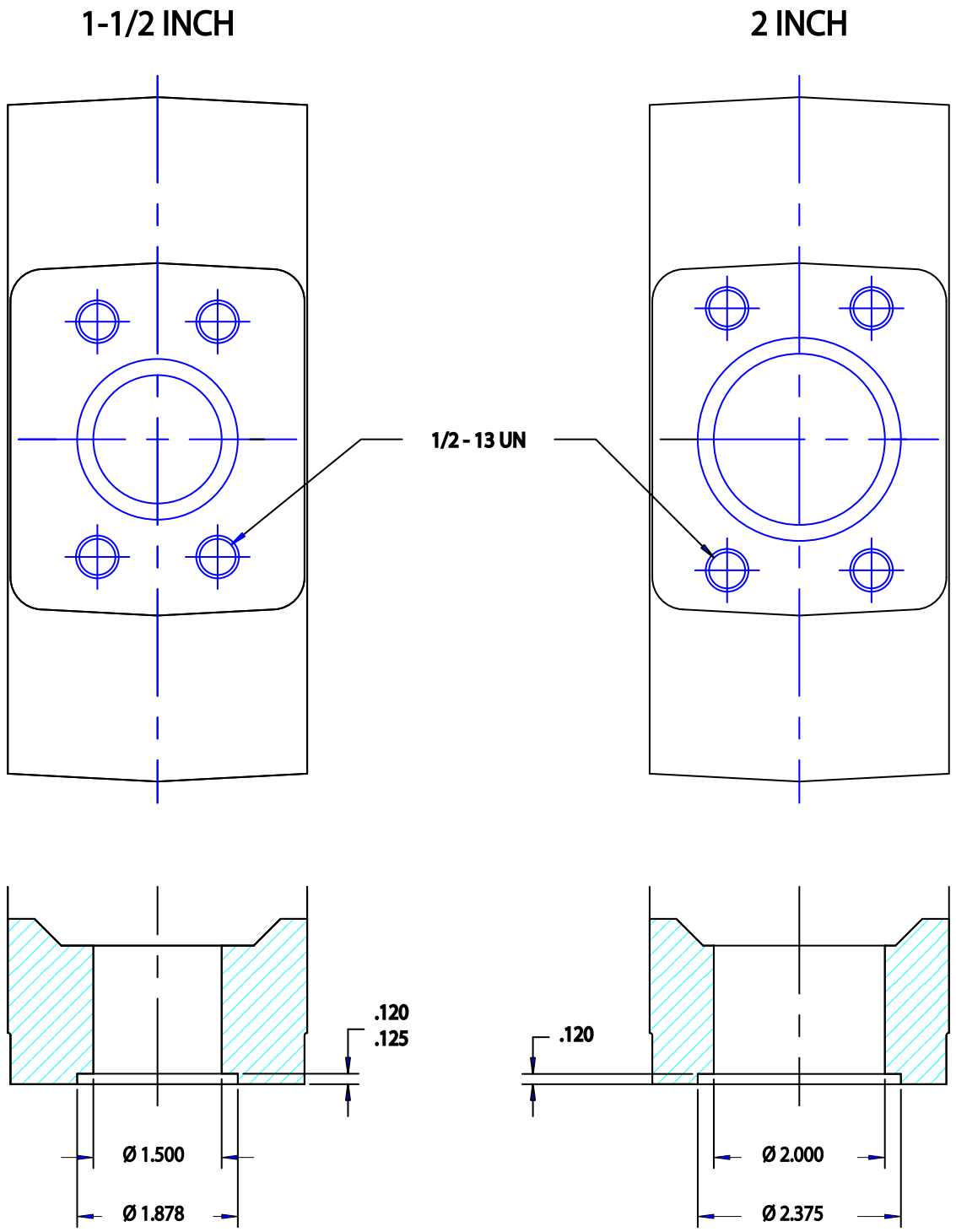

MDVCB-1

HYDRAULIC / PNEUMATIC PRODUCTS
1500 Frost Road · Post Office Box 2068 · Streetsboro, Ohio 44241-0869 · 330/626-2801 · Fax: 330/626-2805

To: All Permco Distributors **Date: February 25, 1998**

Subject: MUNCIE PORT ADAPTER PLATES

Please note that when you are replacing a pump on which there is a Muncie Dry Valve (either a Power-Pro or Power-Miser) you must use either a "counterbored" pump or the adapter plate shown below, to accommodate the locator ring, when reinstalling the Muncie dry valve. This must be done to prevent premature failure of the pump. You will need to supply four (4), 1/2" longer cap screws to bolt the dry valve onto the pump when using the adapter plate.

If this practice is not followed, there are two (2) possibilities for failure:

1- The pump will suck air from between the pump and dry valve and aerate because without the locator ring there is no inside support for the O-ring.
2- The locator ring is also used to center the dry valve shut-off plate against the pump port. Without being centered, the dry valve may pass too much oil into the pump in the dry mode thereby flooding the bleed valve and causing cavitation. The use of a "half" ring will not work properly because the "half" ring while filling the cavity in the dry valve, will not support the inside diameter of the O-ring nor center the dry valve against the pump port.

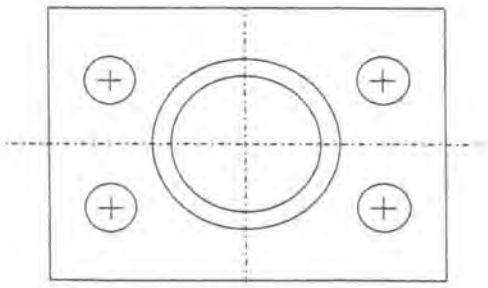

514-00952 1-1/2"

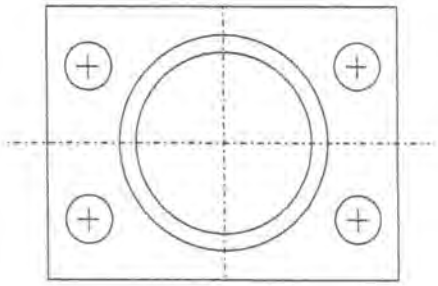

514-00951 2"

Please also note it is usually necessary to have a 3/8" port (the older Muncie pumps had NPT ports while the newer ones have SAE O-ring ports) on the discharge side of the rear cover of the pump as a bleed port, unless you have included the Permco bleed *valve* option in the rear cover. If you have included the Permco bleed *valve* option, and you are using the Muncie Power-Miser dry valve, you **MUST** remove the Muncie bleed valve. (The Power-Pro or butterfly type dry valve, incorporates the bleed valve into the dry valve and you need only to have a 3/8" hose running from the discharge side of the pump directly into the dry valve, the same holds true if you are using the large piston style Commercial dry valve.)

HYDRAULIC / PNEUMATIC PRODUCTS
1500 Frost Road · Post Office Box 2068 · Streetsboro, Ohio 44241-0869 · 330/626-2801 · Fax: 330/626-2805

To: All Permco Distributors **Date: July 1, 2001**

Subject: SPLIT FLANGE PORT ROTATION PLATES

The split flange port rotation kit is a usefully tool utilized when plumbing interference is encountered such as a mounting bracket, frame rail, radiator grill or brace when mounting a dry valve to a hydraulic pump. The port rotation kit allows you to rotate the split flange port 90° to aide in clearing interference obstacles.
In a dry valve application the rotation kit gives the advantage of rotating the inlet port of the dry valve to either a vertical high or vertical low location allowing for ease of plumbing.

1-1/2" SPLIT FLANGE PORT ROTATION KIT
KIT PART NUMBER 1317-24-24

2" SPLIT FLANGE PORT ROTATION KIT
KIT PART NUMBER 1317-32-32

PERMCO VERSA-PAK AND REFUSE INDUSTRY PUMPS

PERMCO PART #	MUNCIE PART #	FLOW @ 1000 RPM	PORTS- SAE 4-BOLT INLET - OUTLET		LIST PRICE
VP28-4COFL*MC*	PMM27-7CFSL	27 GPM	1-1/2"	1-1/4"	
VP32-4COFL*MC*	PMM31-7CFSL	31 GPM	1-1/2"	1-1/4"	
VP37-4COFL*MC*	PMM35-7CFSL	35 GPM	2"	1-1/4"	
VP42-4COFL*MC*	PMM40-7CFSL	40 GPM	2"	1-1/4"	
VP47-4COFL*MC*	NO MUNCIE PART #	45 GPM	2"	1-1/4"	

MC = MUNCIE COUNTERBORE. THE PERMCO PUMP IS MACHINED WITH MUNCIE COUNTERBORE TO ACCEPT A MUNCIE DRY VALVE

PERMCO PART #	COMMERCIAL PART #	FLOW @ 1000 RPM	PORTS- SAE 4-BOLT INLET - OUTLET		LIST PRICE
VP28-4COFL*DV*	316-9610-180	27 GPM	1-1/2"	1-1/4"	
VP32-4COFL*DV*		31 GPM	1-1/2"	1-1/4"	
VP37-4COFL*DV*	316-9610-212	35 GPM	2"	1-1/4"	
VP42-4COFL*DV*	316-9610-181	40 GPM	2"	1-1/4"	
VP47-4COFL*DV*	316-9610-213	45 GPM	2"	1-1/4"	

DV = DRY VALVE. THE PERMCO PUMP IS MACHINED TO ACCEPT A PERMCO DRY VALVE OR A COMMERCIAL DRY VALVE

PERMCO PART #	MUNCIE PART #	DESCRIPTION	PORT SIZE	LIST PRICE
514-00911-DVA	PMV-24	DRY VALVE	1-1/2"	
514-00278-DVA	PMV-32	DRY VALVE	2"	
514-00952	NO MUNCIE PART #	DRY VALVE PORT ADAPTOR	1-1/2"	
514-00951	NO MUNCIE PART #	DRY VALVE PORT ADAPTOR	2"	

*YOU CAN SUBSTITUTE A *DV* PUMP FOR A *MC* PUMP IF YOU UTILIZE THE CORRECT SIZE PORT ADAPTER TO MOUNT THE MUNCIE DRY VALVE
*WHEN REPLACING A MUNCIE DRY VALVE WITH A PERMCO DRY VALVE YOU MUST UTILIZE THE CORRECT SIZE PORT ADAPTER TO MOUNT
*WHEN UTILIZING A DRY VALVE PORT ADAPTOR THE DRY VALVE MOUNTING BOLTS WILL NEED TO BE 1/2" LONGER FOR PROPER MOUNTING
*FOR ACCESSORIES SUCH AS FLOW CONTROL VALVES, UNLOADER VALVES, SWITCH KITS, HOSE KITS, ETC. CONSULT FACTORY

PERMCO BI-ROTATIONAL PUMPS/MOTORS

PERMCO PART #	PARKER PART #	FLOW @ 1000 RPM	NPT PORTS	
			SIDE	REAR
M 2100A890MDXE10-14 or P 2100A290MDXE10-14	PGP 020B346QUYF10-25 OR 308-9110-271	8 GPM	1"	1"
M 2100A890MDXE12-14 or P 2100A290MDXE12-14	PGP 020B346QUYF12-25 OR 308-9110-272	11 GPM	1"	1"
M 2100A890MDXK15-14 or P 2100A290MDXK15-14	PGP 020B346QUYL15-25 OR 308-9110-264	13 GPM	1-1/4"	1"
M 2100A890MDXK17-14 or P 2100A290MDXK17-14	PGP 020B346QUYL17-25 OR 308-9110-265	15 GPM	1-1/4"	1"
M 2100A890MDXK20-14 or P 2100A290MDXK20-14	PGP 020B346QUYL20-25 OR 308-9110-266	17 GPM	1-1/4"	1"

M = MOTOR APPLICATION PUMP AND/OR MOTOR APPLICATION CAN BE USED IN EITHER APPLICATION
P = PUMP APPLICATION ONLY CAN NOT BE USED IN A MOTOR APPLICATION

PEL 15 OR M 5100A831 OF XE15-14	PGP 051B346***YL*15-65 OR 313-9610-665	16 GPM	1"	1-1/4"
P 5151A224AAXK17-54 or M 5151A224AAXQ17-54	PGP 051B346***YL*17-65 OR 313-9610-664	19 GPM	1-1/4"	1-1/2"
P 5151A224AAXK20-54 or M 5151A224AAXK20-54	PGP 051B346***YL*20-65 OR 313-9610-663	23 GPM	1-1/4"	1-1/2"
P 5151A224AAXQ22-54 or M 5151A224AAXQ22-54	PGP 051B346***YL*22-65 OR 313-9610-659	25 GPM	1-1/2"	1-1/2"
P 5151A224AAXQ25-54 or M 5151A224AAXQ25-54	PGP 051B346***YL*25-65 OR 313-9610-658	27 GPM	1-1/2"	1-1/2"
P 5151A224AAXQ27-54 or M 5151A224AAXQ27-54		30 GPM	1-1/2"	1-1/2"

PEL = PUMP AND/OR MOTOR APPLICATION CAN BE USED IN EITHER APPLICATION USED 90% OF THE TIME AS A PUMP
P = PUMP APPLICATION ONLY CAN NOT BE USED IN A MOTOR APPLICATION
M = MOTOR APPLICATION PUMP AND/OR MOTOR APPLICATION CAN BE USED IN EITHER APPLICATION
OF = 1-1/4" X 1-1/4" NPT REAR PORT . PARKER = 1-1/2" X 1-1/2" NPT REAR PORTS. ALL ELSE IS THE SAME
CONSULT FACTORY FOR MOTOR APPLICATIONS IN THE 5151 SERIES

P2100 2 BOLT

P5151 2 & 4 BOLT

P2100 2 & 4 BOLT

STANDARD MOUNTING FOR M2100, P2100 & P5151 SERIES IS SAE 2 & 4 BOLT-B CONSULT FACTORY FOR OPTIONS

PERMCO BI-ROTATIONAL PUMPS/MOTORS

PERMCO PART #	PARKER PART #	FLOW @ 1000 RPM	JIC (ODT) PORTS	
			SIDE	REAR
M 2100A890IDZE10-14 or *P* 2100A290IDZE10-14	PG*P* 020B346JEAF10-25 OR 308-9110-274	8 GPM	1"	1"
M 2100A890IDZE12-14 or *P* 2100A290IDZE12-14	PG*P* 020B346JEAF12-25 OR 308-9110-278	11 GPM	1"	1"
M 2100A890IDZK15-14 or *P* 2100A290IDZK15-14	PG*P* 020B346JEAL15-25 OR 308-9110-275	13 GPM	1-1/4"	1"
M 2100A890IDZK17-14 or *P* 2100A290IDZK17-14	PG*P* 020B346JEAL17-25 OR 308-9110-276	15 GPM	1-1/4"	1"
M 2100A890IDZK20-14 or *P* 2100A290IDZK20-14	PG*P* 020B346JEAL20-25 OR 308-9110-277	17 GPM	1-1/4"	1"

M = MOTOR APPLICATION PUMP AND/OR MOTOR APPLICATION CAN BE USED IN EITHER APPLICATION
P = PUMP APPLICATION ONLY CAN NOT BE USED IN A MOTOR APPLICATION

CONSULT FACTORY FOR OPTIONS NOT LISTED

P2100 2 & 4 BOLT

P2100 2 BOLT

STANDARD MOUNTING FOR M2100, P2100 SERIES IS SAE 2 & 4 BOLT-B CONSULT FACTORY FOR OPTIONS

PERMCO BI-ROTATIONAL PUMPS/MOTORS

PERMCO PART #	MUNCIE PART #	FLOW @ 1000 RPM	NPT PORTS SIDE	NPT PORTS REAR	LIST PRICE
M 2100A890MDXE10-14 or P 2100A290MDXE10-14	PK 8-2BPBB OR PK 108-02BPBB	8 GPM	1"	1"	
M 2100A890MDXE12-14 or P 2100A290MDXE12-14	PK 11-2BPBB OR PK 111-02BPBB	11 GPM	1"	1"	
M 2100A890MDXK15-14 or P 2100A290MDXK15-14	PK 13-2BPBB OR PK 113-02BPBB	13 GPM	1-1/4"	1"	
M 2100A890MDXK17-14 or P 2100A290MDXK17-14	PK 15-2BPBB OR PK 115-02BPBB	15 GPM	1-1/4"	1"	
M 2100A890MDXK20-14 or P 2100A290MDXK20-14	PK 17-2BPBB OR PK 117-02BPBB	17 GPM	1-1/4"	1"	

M = MOTOR APPLICATION PUMP AND/OR MOTOR APPLICATION CAN BE USED IN EITHER APPLICATION
P = PUMP APPLICATION ONLY CAN NOT BE USED IN A MOTOR APPLICATION
PK = PUMP AND/OR MOTOR APPLICATION CAN BE USED IN EITHER APPLICATION USED 90% OF THE TIME AS A PUMP

PEL 15 OR M 5100A831 OF XE15-14	PL 16-2BPBB OR PL 116-02BPBB	16 GPM	1"	1-1/4"	
P 5151A224AAXK17-54	PL 19-2BPBB PR PL 119-02BPBB	19 GPM	1-1/4"	1-1/2"	
P 5151A224AAXK20-54	PL 23-2BPBB PL 123-02BPBB	23 GPM	1-1/4"	1-1/2"	
P 5151A224AAXQ22-54	PL 25-2BPBB OR PL 125-02BPBB	25 GPM	1-1/2"	1-1/2"	
P 5151A224AAXQ25-54	PL 27-2BPBB OR PL 127-02BPBB	27 GPM	1-1/2"	1-1/2"	
P 5151A224AAXQ27-54	PL 30-2BPBB OR PL 130-02BPBB	30 GPM	1-1/2"	1-1/2"	

PEL = PUMP AND/OR MOTOR APPLICATION CAN BE USED IN EITHER APPLICATION USED 90% OF THE TIME AS A PUMP
P = PUMP APPLICATION ONLY CAN NOT BE USED IN A MOTOR APPLICATION
M = MOTOR APPLICATION PUMP AND/OR MOTOR APPLICATION CAN BE USED IN EITHER APPLICATION
PL = PUMP AND/OR MOTOR APPLICATION CAN BE USED IN EITHER APPLICATION USED 90% OF THE TIME AS A PUMP
OF = 1-1/4" X 1-1/4" NPT REAR PORT . MUNCIE = 1-1/2" X 1-1/2" NPT REAR PORTS. ALL ELSE IS THE SAME
CONSULT FACTORY FOR MOTOR APPLICATIONS IN THE 5151 SERIES
90% OF MUNCIE PK AND PL SERIES ARE USED IN PUMP APPLICATIONS

P2100 2 BOLT

P5151 2 & 4 BOLT

P2100 2 & 4 BOLT

STANDARD MOUNTING FOR M2100, P2100 & P5151 SERIES IS SAE 2 & 4 BOLT-B CONSULT FACTORY FOR OPTIONS

Hydraulic/Pneumatic Products

1500 Frost Road - Post Office Box 2068 - Streetsboro, Ohio 44241-0869 - (330)626-2801 - Fax: (330)626-2805

To: All Permco Distributors — October 19, 2009

Subject: 257 Series SAE-C-2-Bolt Shaft End Cover w/90 Degree Rotate

We are pleased to announce a new shaft end cover for the 257 series; originally designed for an OEM customer where mounting space was limited and port locations orientation was critical. This 90 degree rotated flange offers a unique mounting configuration for applications requiring flexibility. See below for dimensions.
Consult factory for additional options and component codeing assistance.

Shaft End Cover Part # 574-00624U (consult factory for actual part number)
2 Bushings Required Part # 921-00647-P

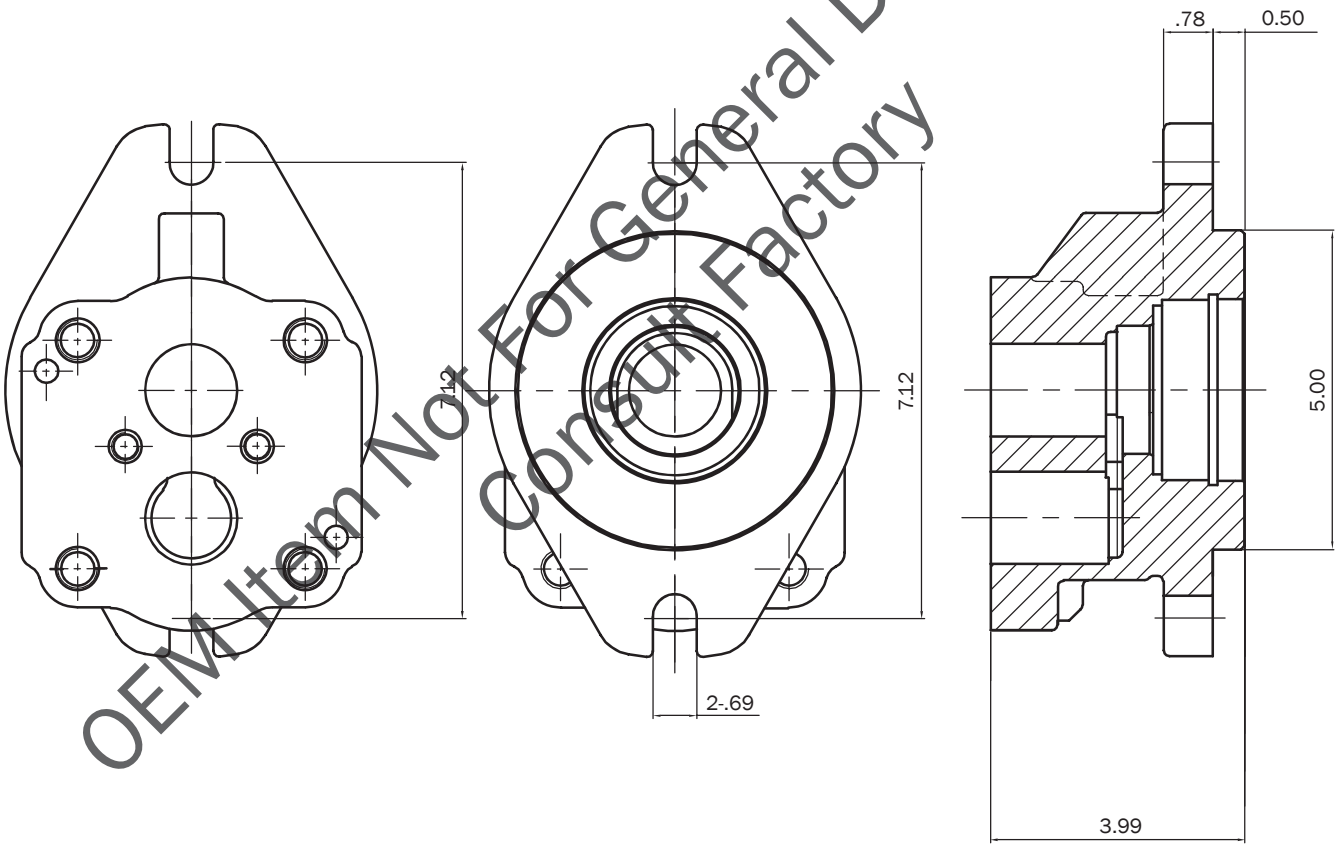

OEM Item Not For General Distribution
Consult Factory

NFPA
Solutions through motion technology

The Sensible Choice

HYDRAULIC / PNEUMATIC PRODUCTS
1500 Frost Road · Post Office Box 2068 · Streetsboro, Ohio 44241-0869 · 330/626-2801 · Fax: 330/626-2805

To: All Permco Distributors **Date: JANUARY 1, 1991**

Subject: NEW GRESEN TYPE SHAFT END COVER

Permco is pleased to announce the addition of the new Gresen type shaft end cover for the P3000 series, designed for replacement of Gresen T. C. series pumps. This new shaft end cover when used with the available 3000 gear widths can be matched to most required flows. When used with the RP Port End Cover nearly any porting requirements can be met.

Part number for the shaft end cover is: 574-00343-HF

Part number for the continental shaft is : 024-00409-HF

Integral gear shaft sets can be run on special order of 25 or more.

Refer to the following page for dimensional diagram.

1500 Frost Road
Streetsboro, Ohio 44241-0829
Phone: (330) 626-2801
FAX: (330) 626-2805

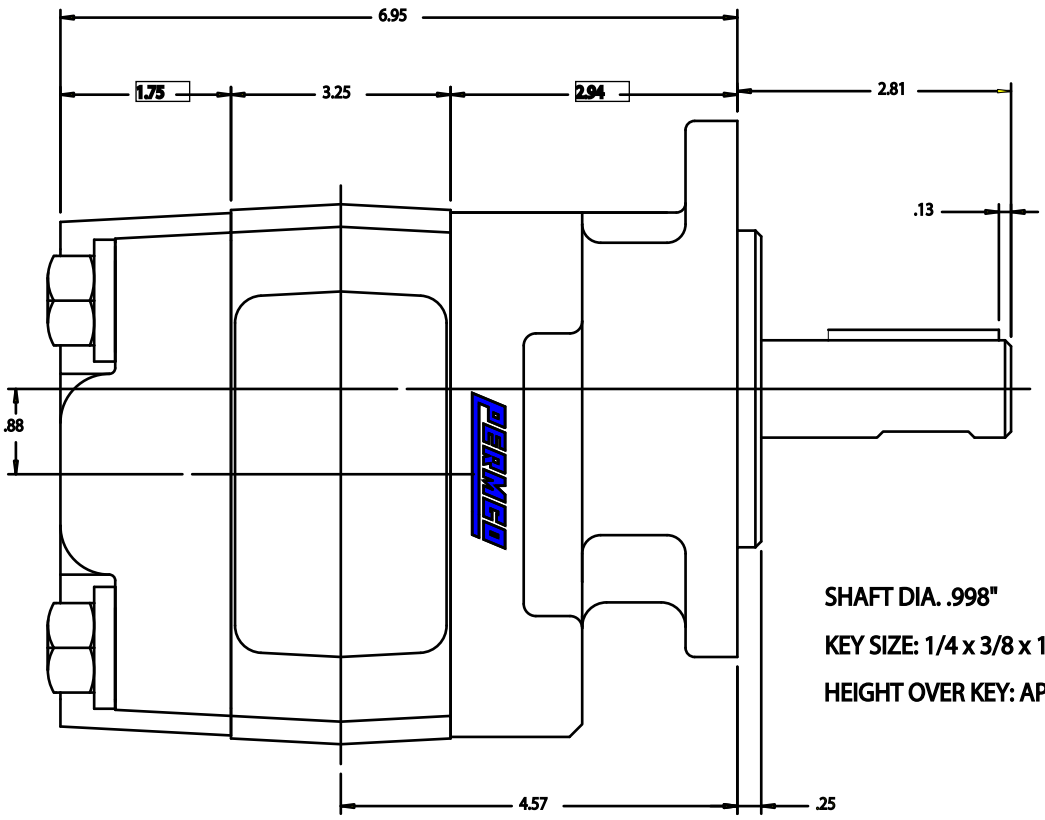

SHAFT DIA. .998"

KEY SIZE: 1/4 x 3/8 x 1-3/4

HEIGHT OVER KEY: APPROXIMATELY 1.10"

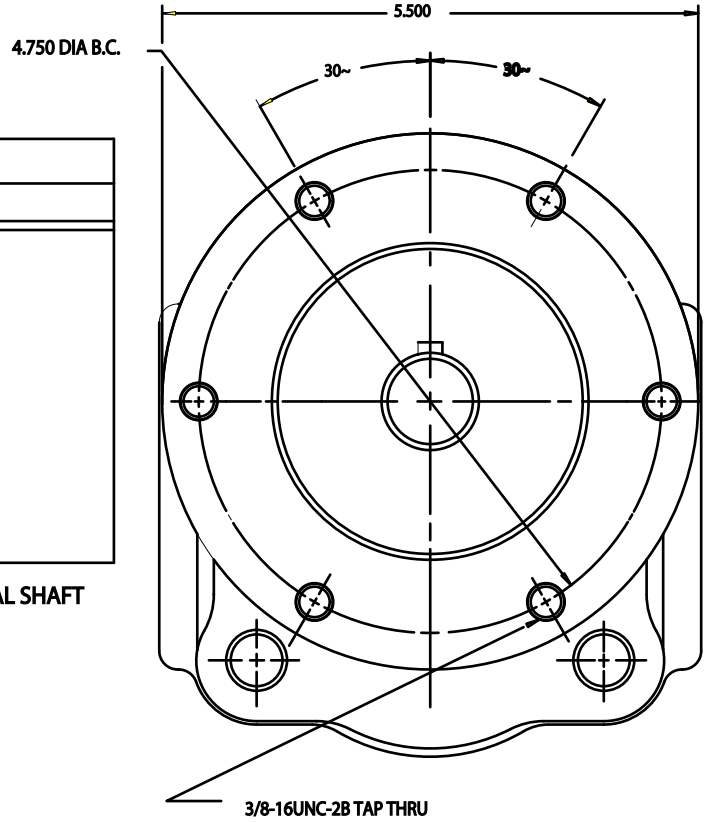

SHAFT END COVER PARTS LIST

QTY.	PART NUMBER	DESCRIPTION
1	574-00343-HF	SHAFT END COVER
1	024-00344-HFS *	GEAR SHAFT SET
1	KA-0558-1XS	RING SEAL
2	L-0280-K	CHECK VALVE ASSEMBLY
1	W023-206	SNAP RING
1	W58-39	SHAFT BEARING
1	W62-26-16	SHAFT SEAL
2	X-0921	BEARING

* OR USE : U-0996L - ** GEAR SET WITH 024-00409-HF CONTINENTAL SHAFT

GRESEN TC-SERIES REPLACEMENT

Copyright © 1991 Permco, Inc.

HYDRAULIC / PNEUMATIC PRODUCTS
1500 Frost Road · Post Office Box 2068 · Streetsboro, Ohio 44241-0869 · 330/626-2801 · Fax: 330/626-2805

To: All Permco Distributors **Date: JANUARY 1, 1990**

Subject: NEW CHELSEA TYPE SHAFT END COVER

Permco is pleased to announce the addition of the new Chelsea type shaft end cover for the P3000 series. This new shaft end cover when used with the AC-0024L-2-XX (1" through 2" gear size) gear shaft set makes it possible to replace the Chelsea mount pumps that mount directly to Chelsea power take-offs (R Flange) and Muncie power take-offs (G Flange).

This configuration has a 2.75" pilot on a special (4) bolt mount with a recessed SAE-B-Spline (7/8" x 13 tooth splined shaft).

Part number for the shaft end cover is: 574-00230-CHL

Refer to the following page for dimensional diagram.

1500 Frost Road
Streetsboro, OH. 44241-0829
Phone: (330) 626-2801
Fax: (330) 626-2805

ASSEMBLY:

P3000 SERIES WITH P.T.O. DIRECT MOUNT SHAFT END COVER

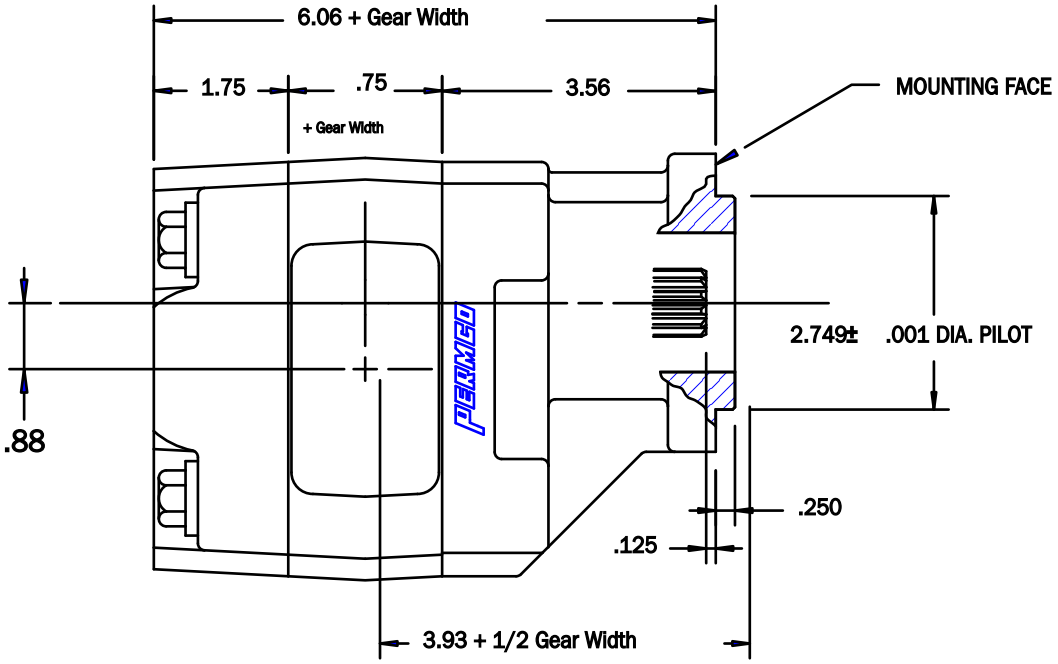

SHAFT END COVER PARTS LIST		
QTY.	PART NUMBER	DESCRIPTION
1	574-00230-CHL	SHAFT END COVER
1	AC-0024L-2-**	INTEGRAL DRIVE GEAR
1	U-0996L-**	IDLER GEAR
1	W62-26-16	SHAFT SEAL
1	KA-0558-1XS	RING SEAL
1	S-0280	PLUG
2	X-0921	BEARING

** Denotes Gear Widths
Available Sizes: 1.25", 1.50", 1.75", 2.00"

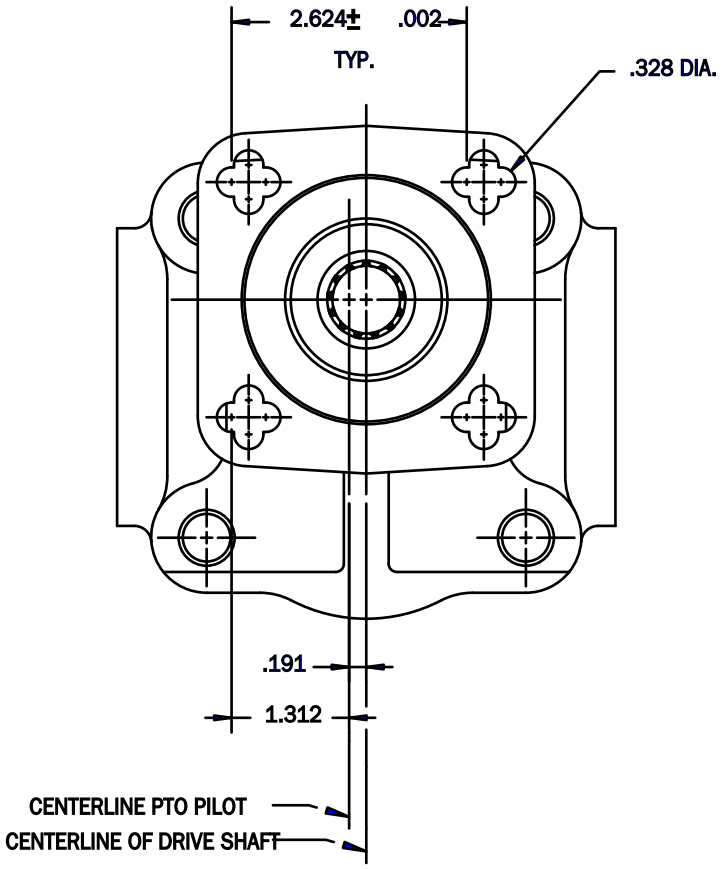

FOR PUMP CODING		
Code	DESCRIPTION	
016	CLOCKWISE	SHAFT END COVER
116	COUNTERCLOCKWISE	SHAFT END COVER
216	DOUBLE ROTATION	SHAFT END COVER
54	SAE B SPLINE	DRIVE SHAFT

Copyright © 1990 Permco, Inc.

HYDRAULIC / PNEUMATIC PRODUCTS
1500 Frost Road · Post Office Box 2068 · Streetsboro, Ohio 44241-0869 · 330/626-2801 · Fax: 330/626-2805

To: All Permco Distributors **Date: MARCH 31, 1997**

Subject: P5000 Port End Cover with Relief Valve Assembly

We are pleased to announce a new P5000 port end cover with relief valve assembly. This new PEC will incorporate the same relief valve technology (though modified slightly to attain higher pressures) that has proven very successful in our DM-640 dump pumps for years.

To order the assembly, please use part number: 592-00902

This assembly is made up of the following parts:

592-00899	Port end cover machined for relief valve
RP-5514-3000	Relief valve assembly

Please note this new version relieves externally instead of internally. A 1" NPT port is provided for the tank connection now required. The main benefit to this configuration is a reduction in the possibility of overheating the pump when the flow is going over relief.

Though there are many applications where this PEC could be used, the primary application for which it was added is the LIVE FLOOR APPLICATIONS.

Please see the below drawing for dimensional information.

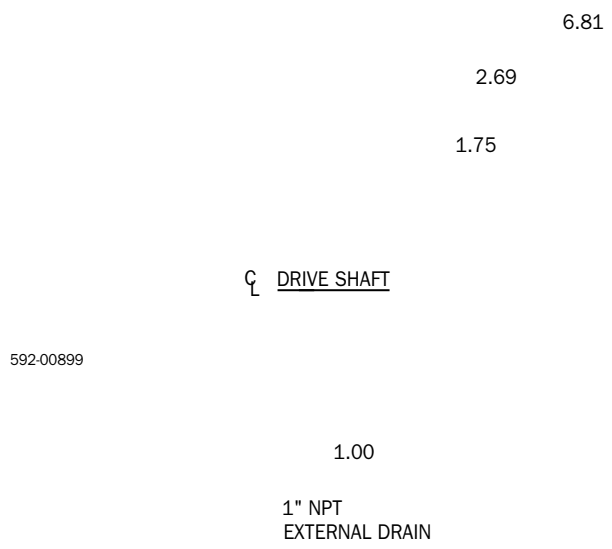

EXTERNAL DRAIN CODING
5000

IM	PEC W/RV SINGLE CW
IR	PEC W/RV SINGLE CCW
IN	PEC W/RV MULTI CW
IS	PEC W/RV MULTI CCW
IP	PEC W/RV XSD CW
IT	PEC W/RV XSD CCW

HYDRAULIC / PNEUMATIC PRODUCTS
1500 Frost Road · Post Office Box 2068 · Streetsboro, Ohio 44241-0869 · 330/626-2801 · Fax: 330/626-2805

To: All Permco Distributors **Date: April 7, 1997**

Subject: P3000 Port End Cover with Relief Valve Assembly

We are pleased to announce a new P3000 port end cover with relief valve assembly. This new PEC will incorporate the same relief valve technology that has proven very successful in our small dump pump (DM-400) for years.

To order the assembly, please use part number: 514-00913-PCR

Please note this new version, when ordering as an assembly the port end cover is machined so as to be capable of being assembled to relieve wither internally or externally. Please review the following page to determine the correct assembly for your specific application.

Please note that the internally relieved port end cover is for intermittent use only. There is the possibility of overheating the pump very quickly since the relief valve is vented directly into the suction side of the pump. The advantage of this style port end cover is that no additional plumbing is required. The externally drained relief valve assembly requires a 1" hose plumbed back to tank. There is less possibility of overheating with this assembly.

Please see the below drawing for dimensional information.

INTERNAL DRAIN CODING
3000

OM	PEC W/RV SINGLE CW
OR	PEC W/RV SINGLE CCW
ON	PEC W/RV MULTI CW
OS	PEC W/RV MULTI CCW
OP	PEC W/RV XSD CW
OT	PEC W/RV XSD CCW

EXTERNAL DRAIN CODING
3000

IM	PEC W/RV SINGLE CW
IR	PEC W/RV SINGLE CCW
IN	PEC W/RV MULTI CW
IS	PEC W/RV MULTI CCW
IP	PEC W/RV XSD CW
IT	PEC W/RV XSD CCW

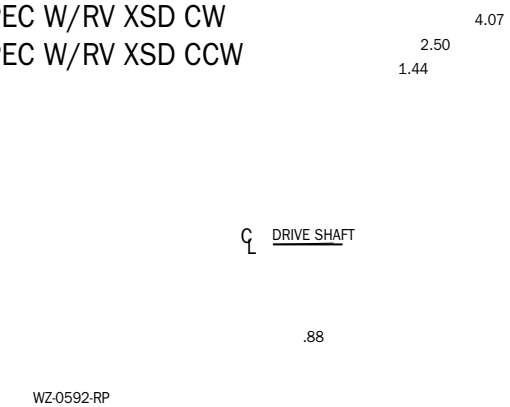

INSTRUCTIONS FOR 514-00913-PCR

Before installing Port End Cover on unit final assembly must be completed.

1) Orient Port End Cover based on application requirements.
   Example: Internal relief and counterclockwise (CCW) rotation use Fig. A-1
2) Install Ring Seal in appropriate bore and press in bearings.
3) Install the pipe plug that meets the application requirements (1" or 1/2").
4) Adjusting pressure is accomplished by removing the large acron nut and turning clockwise (CW) to increase pressure setting.

CAUTION: DO NOT ADJUST RELIEF VALVE PRESSURE SETTING ON INTERNAL VENTED ARRANGEMENT WHILE RUNNING OVER RELIEF!

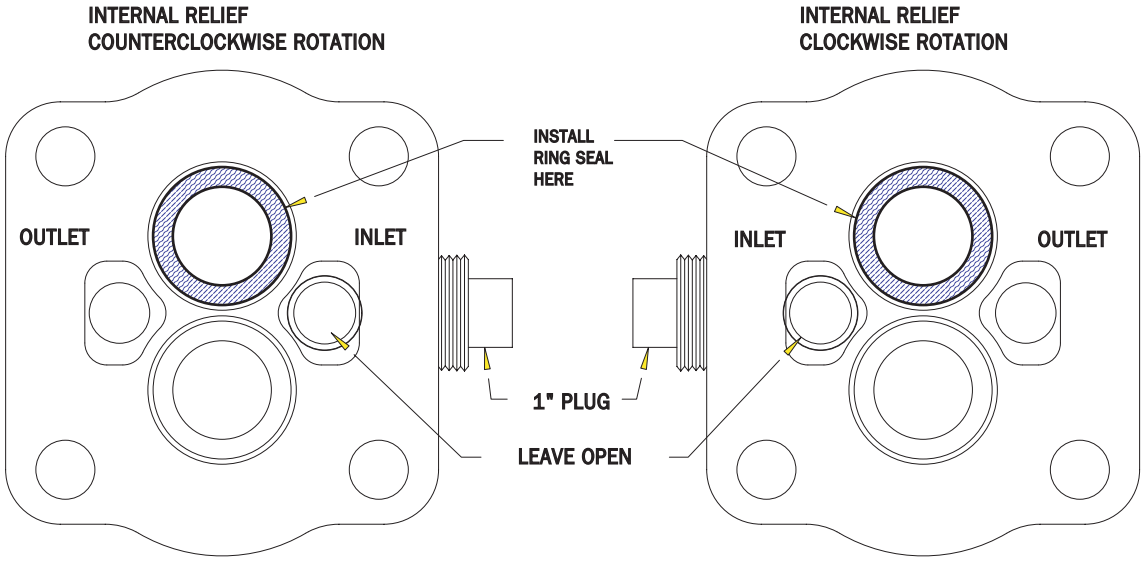

Fig. A-1 Fig. A-2

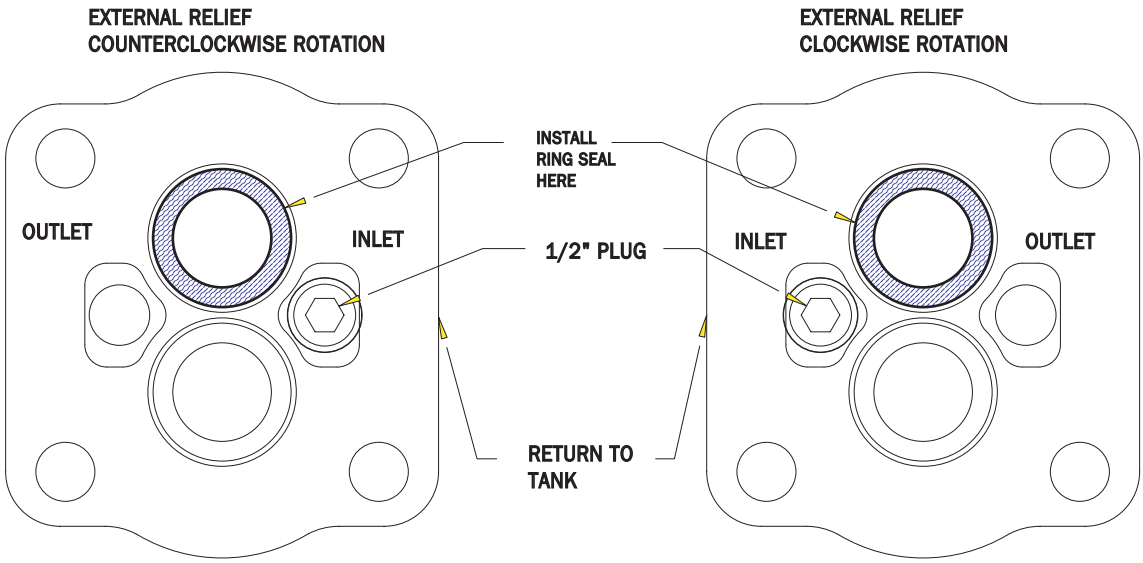

Fig. A-3 Fig. A-4

Hydraulic/Pneumatic Products

1500 Frost Road - Post Office Box 2068 - Streetsboro, Ohio 44241-0869 - (330)626-2801 - Fax: (330)626-2805

To: All Permco Distributors ***October 19, 2009***

Subject: 2100 Port End Cover, Large Inlet Port Boss

In efforts to promote a better understanding of our 2100 Large Inlet Port End Cover; listed below are part numbers, descriptions and explanation of this product.

2100 Port End *Cover with Large Inlet Port Boss* *provides for up to 1-1/4" JIC or NPT rear port for the suction side and up to 1" JIC or NPT rear port for the pressure side. Each bearing bore is machined to accept a ring seal to provide for either clockwise or counter clockwise rotation; simply insert the ring seal in the proper bore for the desired rotation. It is important to remember that if utilizing NPT threads not to use Teflon tape on the fittings and not over torque the fittings; either of these two variables could crack the port boss.*

For coding the model number or to order a pre-ported port end cover refer to the Permco 2100 code book for specific coding characters and ported part numbers; for special porting consult factory.

2100 Port End Cover, Large Inlet Port Boss Blank (Non-Ported)

PART #	SERIES
592-01080	2100

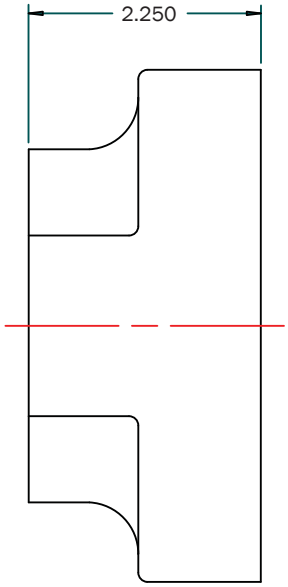

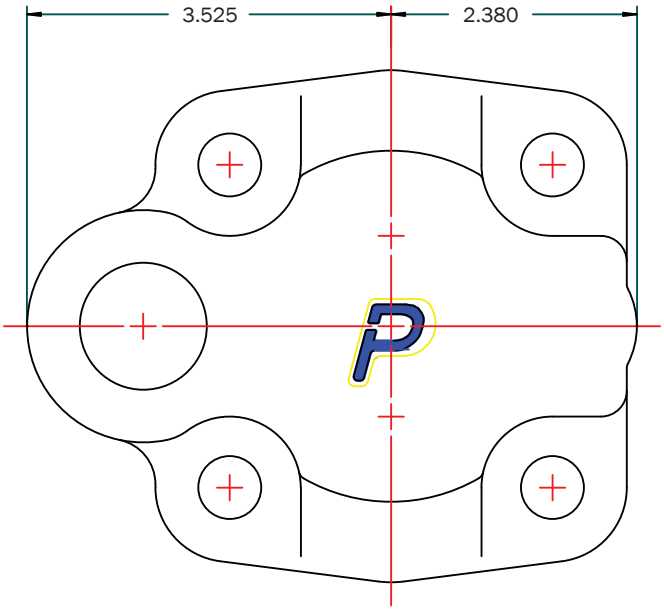

NFPA Solutions through motion technology

The Sensible Choice

Hydraulic/Pneumatic Products

1500 Frost Road - Post Office Box 2068 - Streetsboro, Ohio 44241-0869 - (330)626-2801 - Fax: (330)626-2805

To: All Permco Distributors — October 19, 2009

Subject: 124 Series Relief Valve Port End Cover

We are pleased to announce a new relief valve port end cover for the 124 series; the compact design is suited for applications where space is at a premium and allows for simple circuit plumbing. The relief valve is adjustable from 500 to 3500 PSI with exhaust port to tank; pump inlet and outlet ports are available in SAE Straight Thread (ODT), SAE Split Flange, BSPP, Metric Split Flange and Metric Straight Thread. See below for dimensions and component requirements. Consult factory for additional options and assistance.

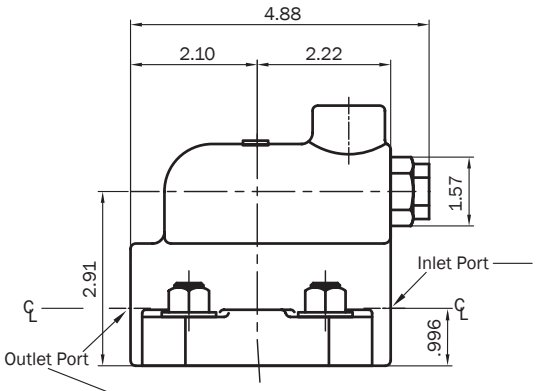

Inlet port side location available in 3/4", 7/8", 1", or 1-1/4" SAE Straight Thread (ODT), SAE Split Flange, Metric Straight Thread, Metric Split Flange or BSPP (use 124 code book for port codes)

Relief valve exhaust port top location available in 3/8" or 1/2" SAE Straight Thread (ODT), Metric Straight Thread, or BSPP

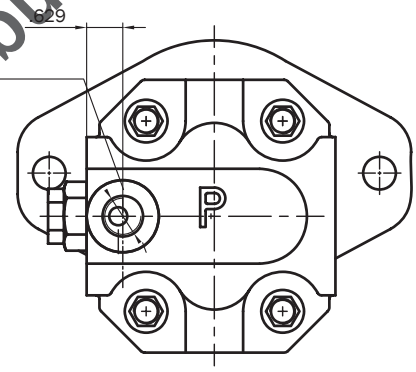

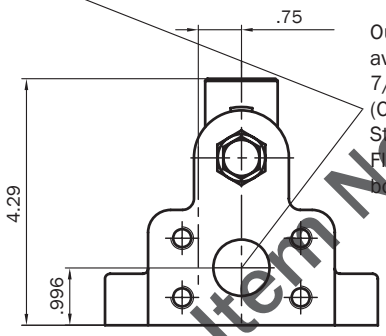

Outlet port side location available in 1/2", 5/8", 3/4", 7/8" or 1" SAE Straight Thread (ODT), SAE Split Flange, Metric Straight Thread, Metric Split Flange or BSPP (use 124 code book for port codes)

RV Cover Assembly Part Number = 124 + RV Code + Port Code
Example of RV Cover Assembly Part Number:
124-RVAD-AH = Build Program RV Assembly (no ports w/relief)
124-RVDM-AE = Customer Specified Part Number
Due to hundreds of variations and combinations consult factory for assistance.

Relief Valve Part Number = 124RV- (+ relief setting code)
Example: 124RV-M (consult factory for actual part number)

OEM Item Not For General Distribution
Consult Factory

MODEL CODING

The "RV" cover code for the 124 series relief valve cover series should be put into the pump model code as described below. The code consist of the "RV" which represent the relief valve plus 2 additional characters detailing the relief exhaust porting, and relief setting.

RV (1) (2) (3) (4)
Sample Model Code: P124A082*RV*<u>*DMAE*</u>ZA15-54
1 2 3 4

RV = Relief Valve Cover
(1) = Relief Exhaust Port
(2) = Relief Valve Setting
(3) & (4) = Standard Port Code From Code Book

(1) RELIEF VALVE EXHAUST PORT

	JIC	BSPP	MST
Blank	A	A	A
3/8"	C	N	X
1/2"	D	P	Y

(2) RELIEF SETTING

1000 PSI = D
1250 PSI = F
1500 PSI = H
1750 PSI = K
2000 PSI = M
2250 PSI = P
2500 PSI = R
2750 PSI = T
3000 PSI = V
3250 PSI = X

NFPA Solutions through motion technology

The Sensible Choice

Hydraulic/Pneumatic Products

1500 Frost Road - Post Office Box 2068 - Streetsboro, Ohio 44241-0869 - (330)626-2801 - Fax: (330)626-2805

To: Permco Distributors ***October 19, 2009***

Subject: Piggyback, Transition and Add-A-Pump Description

In efforts to promote a better understanding of our Piggyback, Transition and Add-A-Pump covers listed below is descriptions and applications for each type cover.

Piggyback Covers

Piggy/Back type units are used when a wide range of flow options are needed and/or when segregated flows between pumping sections is required. Piggy/Back type units are common to our roller bearing series and offer a wide range of configurations from 3000/3000, 5000/3000, 5000/5000, 7500/3000 to 7500/5000; if higher pressures are required dowelled units can be utilized (ex: 7600/3100). Piggy/Back units are available only within common series of Permco pumps.

Piggy/Back assemblies combine separate hydraulic pumps on one common drive shaft. Fluid from separate reservoirs, as well as different types of hydraulic fluids can be used without intermixing. The Piggy/Back configuration and also provides a much greater range of pump output flows than is available from standard multiple units by allowing the pumping sections to be sized for optimum efficiency. For example, a main system might require 100 GPM as a primary supply and 15 GPM as a secondary supply; the ideal piggy/back assembly would be a 7500 with a 3” gear (100 GPM @ 2000 RPM) and a P3000 with 1” gear (15 GPM @ 2000 RPM). Applications for piggy/back pumps are usually found where the range of pump outputs is not within conventional multiple pump capabilities. Examples are main hydraulic and steering systems where pump output flows have a wide variance; other applications include those using two reservoirs or a reservoir and a sump which require the separation of pumped fluids. Multiple section pumps (tandem, triples etc) can be used in piggy/back configurations, however it is important to remember that the entire input torque is fed through the drive shaft and should not exceed the drive shaft PL factor.

Piggy/Back type units consist of a special piggy/back port end cover for the front section, a special piggy/back shaft end cover for the rear section and special connecting shaft. The port end cover, shaft end cover and connecting shaft are mated and bolted together to form the Piggy/Back unit. The front pump section consist of a standard tandem gear shaft set and/or a gear set and the rear pump section consist of a standard gear set that accepts the connecting shaft; the port end cover and shaft end cover both have shaft type lip seals that keep fluids segregated between pumping units. Piggy/Back units can be configured CW, CCW or Bi-Rotation.

Transition Covers

Transition type units are used when a wide range of flow options are needed and provide a much greater range of output flows than is available from standard multiple units of the same series. Transition type units are common to our bushing series and offer a wide range of configurations from P197/P124, P257/P124, P257/P197 and P360/P124. Transition covers connect only sleeve bearing pumps within the Permco line.

Transition cover assemblies combine different series of pump on one common drive shaft. An assembly example that consist of a single pump section P197 and single pump section P124 (P197/P124) can utilize one common inlet to supply inlet hydraulic fluid to both pumping sections and must be plumbed to a common reservoir. Applications for transition cover type assemblies are usually found on mining equipment, cranes, logging equipment and any hydraulic system that requires a wide range of hydraulic pump output flows. Transition cover assemblies can consist of single, tandem and multiple pumping sections for each series. It is important to remember that the entire input torque is fed through the drive shaft and should not exceed the drive shaft PL factor.

Transition Covers are a one piece construction that consists of a Port End Cover for the front unit and Shaft End Cover for the rear unit; this allows for a combined and shared inlet for both series of pumps and a separate outlet for the front

pump. The two series are mated together with a special connecting shaft, therefore the front pump section would consist of a standard tandem gear shaft set and/or a gear set and the rear pump section consist of a standard gear set that accepts the special connecting shaft. Transition covers can be configured for CW and CCW rotation. The Transition cover may also be referred to as a transition bearing carrier in the hydraulic industry.

Add-A-Pump Covers

An Add-A-Pump unit is used when a wide range of flow and pressure options are needed and/or when segregated flows between pumping sections is required. Add-A-Pumps are common to our roller bearing (3000/3100 and 5000/5100) and bushing series (197, 257 and 360). Add-A-Pump covers connect any type of hydraulic pump manufactured as long as it has the standard configuration of a SAE pattern (shaft and shaft end cover).

An Add-A-Pump is constructed to allow the mounting of a separate pump to the back of an existing pump; flow is segregated between the two pumps; fluid from separate reservoirs, as well as different types of hydraulic fluids can be used without intermixing; each unit would have its own inlet and outlet.

Applications for Add-A-Pumps are usually found where the range of output flows and pressures are not within conventional multiple pump capabilities.

An example of this would be a P360 with an Add-A-Pump port end cover and mounted to that a small piston pump; the piston pump output shaft would mate into the P360 output shaft. Multiple section pumps (tandem, triples etc) can be used in Add-A-Pump configurations, however it is important to remember that the entire input torque is fed through the drive shaft and should not exceed the drive shaft PL factor.

Add-A-Pump type units consist of a special one piece construction port end cover and special connecting shaft designed to accept either an SAE-A-2-Bolt or SAE-B-2-Bolt mating flange with an SAE-A-Spline or SAE-B-Spline output shaft depending upon series (2 “B” only available in 257 and 360). Add-A-Pump units can be configured CW, CCW or bi-rotational dependent on series.

Hydraulic/Pneumatic Products

1500 Frost Road - Post Office Box 2068 - Streetsboro, Ohio 44241-0869 - (330)626-2801 - Fax: (330)626-2805

To: All Permco Distributors ***February 23, 2007***

Subject: Piggy/Back Between Series Covers

In efforts to promote a better understanding of our Piggy/Back Between Series Covers; listed below are part numbers, descriptions and explanation of those products.

Piggy/Back Between Series *Covers* are used when a wide range of flow option are needed and/or when segregated flows between unit series is required. Piggy/Back units offer a wide range of configuration from 3000/3000, 5000/3000, 5000/5000, 7500/3000 to 7500/5000; if higher pressures are required dowelled units can be utilized (ex: 7600/3100). Single, tandem or triple sections can be constructed within both the front and rear units and offer the same mounting, porting and shaft options as our standard series.
Construction example of utilizing a 7500/3000 series units for a high flow requirement (40GPM) and a low flow requirement of (8GPM); 7500 2" Gear = 40GPM x 3000 1-1/4" Gear = 8.5GPM @ 1000RPM with segregated flows.
Coding Example Single: P7500A067JNNJ20-6/P3000A081ADTI12-12
Coding Example Tandem: P7600B167KNNM20-6CNM20-1/P3100B181AXTF12-12CTF12-1
Match up the Port End Cover (female) flange type and size (front unit) with the Shaft End Cover (male) flange type and size (rear unit) and utilize the corresponding series connecting shaft.
Refer to Permco Series Code Books when constructing model numbers and to identify piece parts for coding and assembly; consult factory for assistance.

Piggy/Back Between Series Port End Covers (PEC)

PART #	SERIES	FLANGE TYPE	PORT END COVER/CODE/DESCRIPTION
CB-0574-24	3000	2-BOLT-B (Female)	PEC-CODES JN(CW) KN(CCW) LN(BI-RO)
CB-0574-24D	3100	2-BOLT-B (Female)	PEC-CODES JN(CW) KN(CCW) LN(BI-RO)
IB-0574-24	5000	2-BOLT-B (Female)	PEC-CODES JN(CW) KN(CCW) LN(BI-RO)
IB-0574-24D	5100	2-BOLT-B (Female)	PEC-CODES JN(CW) KN(CCW) LN(BI-RO)
RB-0574-24	7500	2-BOLT-C (Female)	PEC-CODES JN(CW) KN(CCW) LN(BI-RO)
RB-0574-24D	7600	2-BOLT-C (Female)	PEC-CODES JN(CW) KN(CCW) LN(BI-RO)

Piggy/Back Between Series Shaft End Covers (SEC)

PART #	SERIES	FLANGE TYPE	SHAFT END COVER/CODE/DESCRIPTION	CONNECTING SHAFT/CODE
CB-0574-15	3000/3000	2-BOLT-B (Male)	SEC-CODES 080(CW) 180(CCW) 280(BI)	ZE-0022 (CODE 03)
CB-0574-15D	3100/3100	2-BOLT-B (Male)	SEC-CODES 080(CW) 180(CCW) 280(BI)	ZE-0022 (CODE 03)
CB-0574-15	5000/3000	2-BOLT-B (Male)	SEC-CODES 080(CW) 180(CCW) 280(BI)	ZC-0022 (CODE 11)
CB-0574-15D	5100/3100	2-BOLT-B (Male)	SEC-CODES 080(CW) 180(CCW) 280(BI)	ZC-0022 (CODE 11)
IB-0574-15	5000/5000	2-BOLT-B (Male)	SEC-CODES 080(CW) 180(CCW) 280(BI)	ZF-0022 (CODE 11)
IB-0574-15D	5100/5100	2-BOLT-B (Male)	SEC-CODES 080(CW) 180(CCW) 280(BI)	ZF-0022 (CODE 11)
YA-0574-15	7500/3000	2-BOLT-C (Male)	SEC-CODES 081(CW) 181(CCW) 281(BI)	ZG-0022 (CODE 12)
YA-0574-15D	7600/3100	2-BOLT-C (Male)	SEC-CODES 081(CW) 181(CCW) 281(BI)	ZG-0022 (CODE 12)
KB-0574-15	7500/5000	2-BOLT-C (Male)	SEC-CODES 081(CW) 181(CCW) 281(BI)	ZI-0022 (CODE 12)
KB-0574-15D	7600/5100	2-BOLT-C (Male)	SEC-CODES 081(CW) 181(CCW) 281(BI)	ZI-0022 (CODE 12)

NFPA Solutions through motion technology

The Sensible Choice

Hydraulic/Pneumatic Products

1500 Frost Road - Post Office Box 2068 - Streetsboro, Ohio 44241-0869 - (330)626-2801 - Fax: (330)626-2805

To: Permco Distributors ***October 19, 2009***

Subject: Piggyback Model Code Description

In efforts to promote a better understanding of our Piggyback type unit coding system, listed below is an example assembly model code and explanation.

Piggyback Model Coding

Piggyback assemblies are model coded starting from the shaft end cover as with any normal multiple unit. Component model codes are basically the same as any standard assembly model and follow the same sequence; component codes can be found in the Permco Code Books; underlined component codes below are special to piggyback type units.

Code Explanation:

P5000A031JNNU22-6/P3000A080ADNI15-11

JN = Piggyback port end cover for 5000 series
080 = Piggyback shaft end cover for the 3000 series
11 = Piggyback connecting shaft for the 5000 to 3000 series

Piggyback Component	3000/3000 3100/3100	5000/3000 5100/3100	7500/3000 7600/3100	5000/5000 5100/5100	7500/5000 7600/5100
Port End					
CW	JN	JN	JN	JN	JN
CCW	KN	KN	KN	KN	KN
Bi-rotation	LN	LN	LN	LN	LN
Shaft End Cover					
CW	080	080	081	080	081
CCW	180	180	181	180	181
Bi-rotation	280	280	281	280	281
Connecting Shaft	03	11	12	11	12

NFPA Solutions through motion technology

The Sensible Choice

Hydraulic/Pneumatic Products

1500 Frost Road - Post Office Box 2068 - Streetsboro, Ohio 44241-0869 - (330)626-2801 - Fax: (330)626-2805

To: Permco Distributors ***October 19, 2009***

Subject: Transition Covers 5100/124 Series

In efforts to promote a better understanding of our Transition Covers; listed below are part numbers, descriptions and explanation of those products.

Transition Covers for our 5100/124 series offers the ability to combine roller bearing and bushing series units together in a seamless one piece construction. The Transition Cover is a one piece combination port end cover for the front unit and shaft end cover for the rear unit; this requires fewer parts for assembly and helps keep the overall pump length to a minimum. Common inlet(s) combines flow within both pump series (flow is not segregated). Transition cover assemblies can consist of a single, tandem and/or multiple pumping section for each series.
Applications for transition covers can be found on mining equipment, construction machinery equipment, cranes, logging equipment, oil field equipment and any hydraulic system that requires a wide range of hydraulic pump output flows.

CODING EXAMPLE: PB5100A031(SPL)NI20-14/P124AAHZA15
Refer to preceding pages for more examples of model number constructions.

Transition Cover Components:

PART #	SERIES	DESCRIPTION
*592-*****	P5100/P124-CW	5100/124 TRANSITION COVER CW
*592-*****	P5100/P124-CCW	5100/124 TRANSITION COVER CCW
022-*****	P5100/P124	5100/124 CONNECTING SHAFT CW/CCW *(1 Required)*
*MA-0558-1XS	5100	RING SEAL *(1 Required)*
R-0921	124	5100 ROLLER BEARING *(2 Required)*
921-01108	124	BUSHING *(2 Required)*

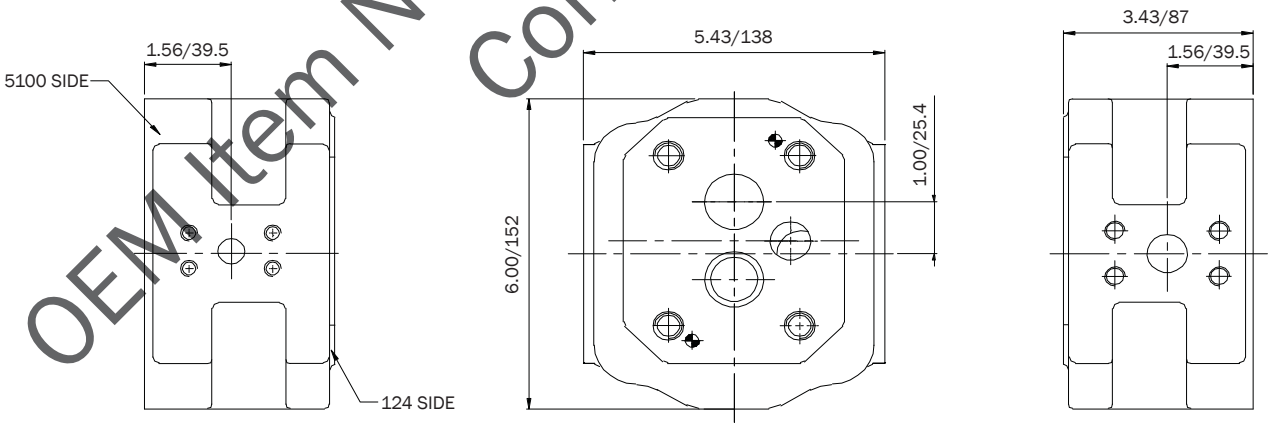

INCHES/MM

**Consult factory for actual part number*

CW VIEW SHOWN

OEM Item Not For General Distribution
Consult Factory

NFPA Solutions through motion technology

The Sensible Choice

Hydraulic/Pneumatic Products

1500 Frost Road - Post Office Box 2068 - Streetsboro, Ohio 44241-0869 - (330)626-2801 - Fax: (330)626-2805

To: Permco Distributors ***October 19, 2009***

Subject: Transition Covers 7600/124 Series

In efforts to promote a better understanding of our Transition Covers; listed below are part numbers, descriptions and explanation of those products.

Transition Covers for our 7600/124 series offers the ability to combine roller bearing and bushing series units together in a seamless one piece construction. The Transition Cover is a one piece combination port end cover for the front unit and shaft end cover for the rear unit; this requires fewer parts for assembly and helps keep the overall pump length to a minimum. Although an inlet is required for both pump series flows can combine internally therefore flows are not segregated. Transition cover assemblies can consist of a single, tandem and/or multiple pumping section for each series.
Applications for transition covers can be found on mining equipment, construction machinery equipment, cranes, logging equipment and any hydraulic system that requires a wide range of hydraulic pump output flows.

CODING EXAMPLE: PB7600A067(TC)NI15-6/P124ANKZA10
Refer to preceding pages for more examples of model number constructions.

Transition Cover Components:

PART #	SERIES	DESCRIPTION
*592C-B0016	P7600/P124-CW/CCW	7600/124 TRANSITION COVER CW/CCW
*022C-B0007	P7600/P124	7600/124 CONNECTING SHAFT CW/CCW (1 Required)
Q-0921	7600	7600 ROLLER BEARING *(2 Required)*
VA-0558-1XS	7600	RING SEAL *(1 Required)*
921-01108	124	BUSHING *(2 Required)*

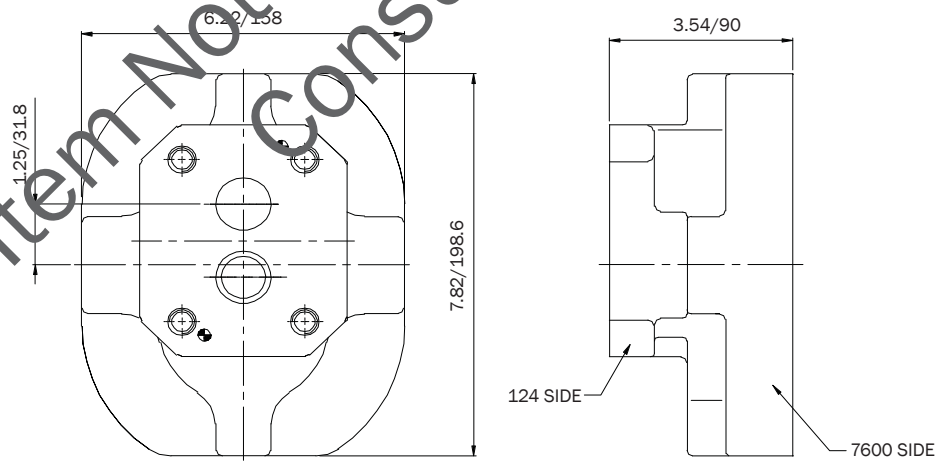

INCHES/MM

** Engineering number; consult factory for actual part number*

OEM Item Not For General Distribution
Consult Factory

NFPA
Solutions through motion technology

The Sensible Choice

Hydraulic/Pneumatic Products

1500 Frost Road - Post Office Box 2068 - Streetsboro, Ohio 44241-0869 - (330)626-2801 - Fax: (330)626-2805

To: Permco Distributors ***October 19, 2009***

Subject: Transition Covers 197/124 Series

In efforts to promote a better understanding of our Transition Covers; listed below are part numbers, descriptions and explanation of those products.

Transition Covers for our 197/124 series offers the ability to combine different bushing series units together in a seamless one piece construction. The Transition Cover is a one piece combination port end cover for the front unit and shaft end cover for the rear unit; this requires fewer parts for assembly and helps keep the overall pump length to a minimum. Common inlet(s) combines flow within both pump series (flow is not segregated). Transition cover assemblies can consist of a single, tandem and/or multiple pumping section for each series.
Applications for transition covers can be found on mining equipment, construction machinery equipment, cranes, logging equipment, oil field equipment and any hydraulic system that requires a wide range of hydraulic pump output flows.

CODING EXAMPLE: PB197A031CAZA20-14/P124AEVZA15
Refer to preceding pages for more examples of model number constructions.

Transition Cover Components:

PART #	SERIES	DESCRIPTION
592-01564-0	P197/P124-CW	197/124 TRANSITION COVER CW
592-01564-1	P197/P124-CCW	197/124 TRANSITION COVER CCW
022-01565	P197/P124	197/124 CONNECTING SHAFT CW/CCW *(1 Required)*
921-00427-P	197	BUSHING *(2 Required)*
921-01108	124	BUSHING *(2 Required)*

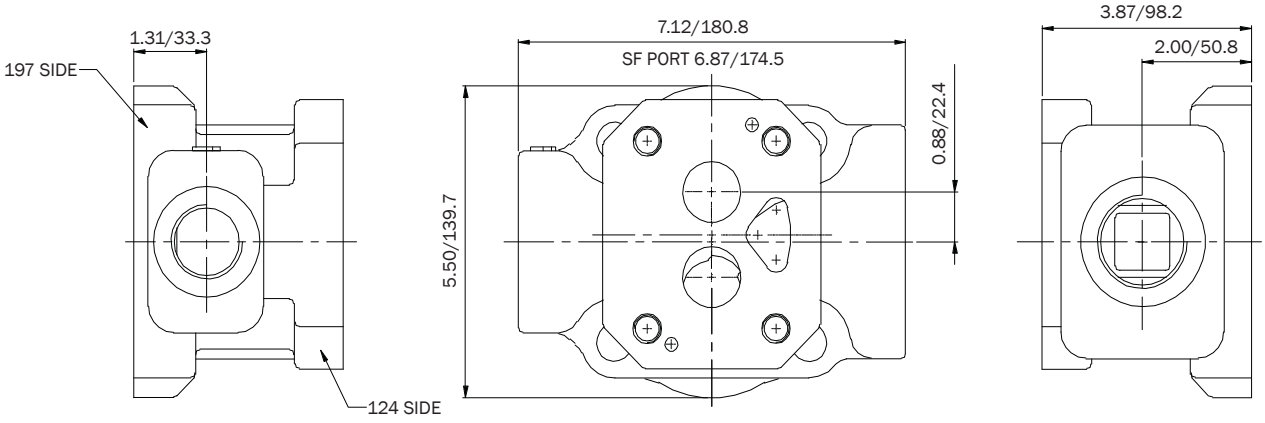

INCHES/MM *CW VIEW SHOWN*

NFPA Solutions through motion technology

The Sensible Choice

Hydraulic/Pneumatic Products

1500 Frost Road - Post Office Box 2068 - Streetsboro, Ohio 44241-0869 - (330)626-2801 - Fax: (330)626-2805

To: Permco Distributors ***October 19, 2009***

Subject: Transition Covers 257/124 Series

In efforts to promote a better understanding of our Transition Covers; listed below are part numbers, descriptions and explanation of those products.

Transition Covers for our 257/124 series offers the ability to combine different bushing series units together in a seamless one piece construction. The Transition Cover is a one piece combination port end cover for the front unit and shaft end cover for the rear unit; this requires fewer parts for assembly and helps keep the overall pump length to a minimum. Common inlet(s) combines flow within both pump series (flows are not segregated). Transition cover assemblies can consist of a single, tandem and/or multiple pumping section for each series. Applications for transition covers can be found on mining equipment, cranes, construction machinery equipment, logging equipment, oil field equipment and any hydraulic system that requires a wide range of hydraulic pump output flows.

CODING EXAMPLE: PB257A067PPZA25-6/P124ANKZA15
Refer to preceding pages for more examples of model number constructions.

Transition Cover Components:

PART #	SERIES	DESCRIPTION
592-01403-0	P257/P124-CW	257/124 TRANSITION COVER CW
592-01403-1	P257/P124-CCW	257/124 TRANSITION COVER CCW
022-01404	P257/P124	257/124 CONNECTING SHAFT CW/CCW *(1 Required)*
921-00647-P	257	BUSHING *(2 Required)*
921-01108	124	BUSHING *(2 Required)*

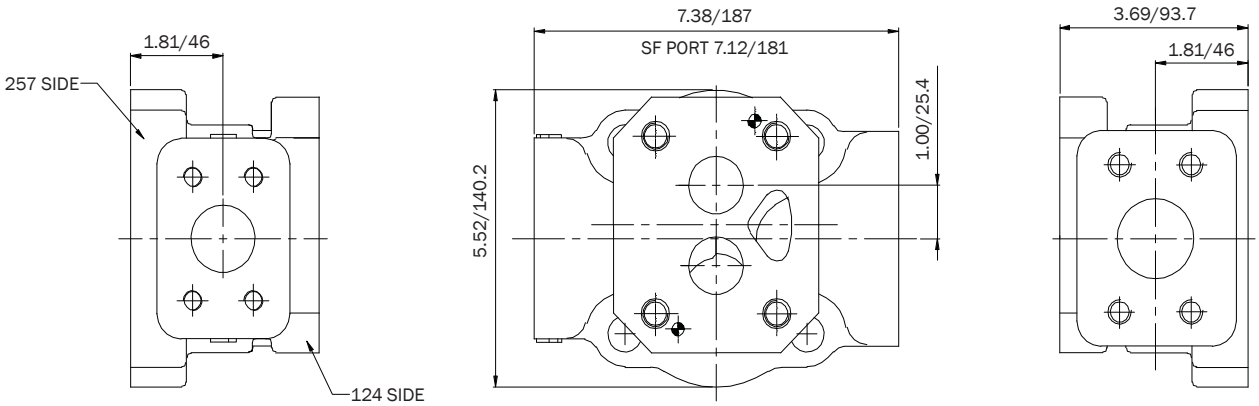

INCHES/MM *CW VIEW SHOWN*

NFPA Solutions through motion technology

The Sensible Choice

Hydraulic/Pneumatic Products

1500 Frost Road - Post Office Box 2068 - Streetsboro, Ohio 44241-0869 - (330)626-2801 - Fax: (330)626-2805

To: Permco Distributors ***October 19, 2009***

Subject: Transition Covers 257/197 Series

In efforts to promote a better understanding of our Transition Covers; listed below are part numbers, descriptions and explanation of those products.

Transition Covers for our 257/197 series offers the ability to combine different bushing series units together in a seamless one piece construction. The Transition Cover is a one piece combination port end cover for the front unit and shaft end cover for the rear unit; this requires fewer parts for assembly and helps keep the overall pump length to a minimum. Common inlet(s) combines flow within both pump series (flows are not segregated). Transition cover assemblies can consist of a single, tandem and/or multiple pumping section for each series. Applications for transition covers can be found on mining equipment, construction machinery equipment, cranes, logging equipment, oil field equipment and any hydraulic system that requires a wide range of hydraulic pump output flows.

CODING EXAMPLE: PB257A067PPZA25-6/P197APEZA15
Refer to preceding pages for more examples of model number constructions.

Transition Cover Components:

PART #	SERIES	DESCRIPTION
592-01401-0	P257/P197-CW	257/197 TRANSITION COVER CW
592-01401-1	P257/P197-CCW	257/197 TRANSITION COVER CCW
022-01402	P257/P197	257/197 CONNECTING SHAFT CW/CCW *(1 Required)*
921-00647-P	257	BUSHING *(2 Required)*
921-00427-P	197	BUSHING *(2 Required)*

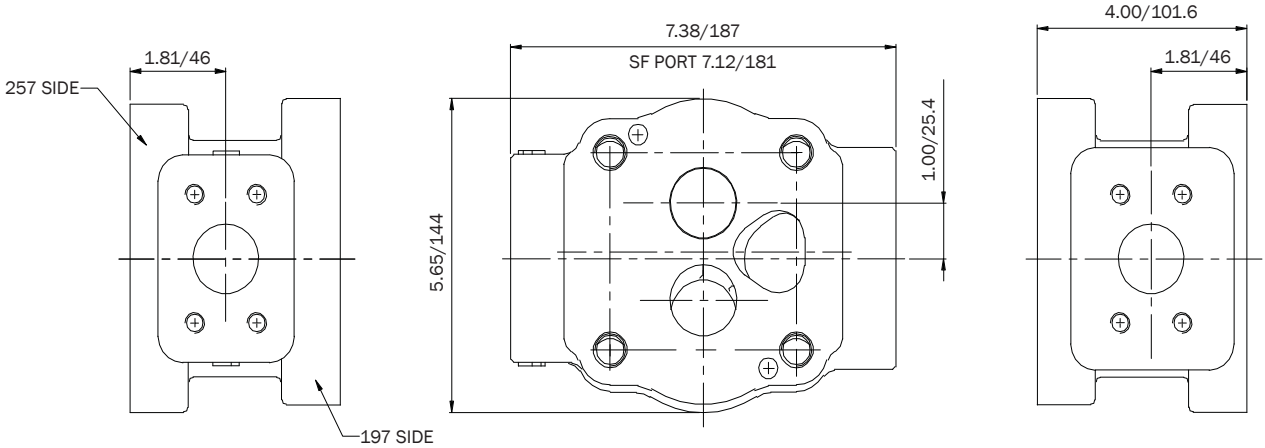

INCHES/MM *CW VIEW SHOWN*

NFPA Solutions through motion technology

The Sensible Choice

Hydraulic/Pneumatic Products

1500 Frost Road - Post Office Box 2068 - Streetsboro, Ohio 44241-0869 - (330)626-2801 - Fax: (330)626-2805

To: Permco Distributors ***October 19, 2009***

Subject: Transition Covers 360/124 Series

In efforts to promote a better understanding of our Transition Covers; listed below are part numbers, descriptions and explanation of those products.

Transition Covers for our 360/124 series offers the ability to combine different bushing series units together in a seamless one piece construction. The Transition Cover is a one piece combination port end cover for the front unit and shaft end cover for the rear unit; this requires fewer parts for assembly and helps keep the overall pump length to a minimum. Common inlet(s) combines flow within both pump series (flows are not segregated). Transition cover assemblies can consist of a single, tandem and/or multiple pumping section for each series. Applications for transition covers can be found on mining equipment, construction machinery equipment, cranes, logging equipment, oil field equipment and any hydraulic system that requires a wide range of hydraulic pump output flows.

CODING EXAMPLE: PB360A067DEZA25-6/P124ANKZA10
Refer to preceding pages for more examples of model number constructions.

Transition Cover Components:

PART #	SERIES	DESCRIPTION
592-01520-0	P360/P124-CW	360/124 TRANSITION COVER CW
592-01520-1	P360/P124-CCW	360/124 TRANSITION COVER CCW
022-01521	P360/P124	360/124 CONNECTING SHAFT CW/CCW *(1 Required)*
921-01380	360	BUSHING *(2 Required)*
921-01108	124	BUSHING *(2 Required)*

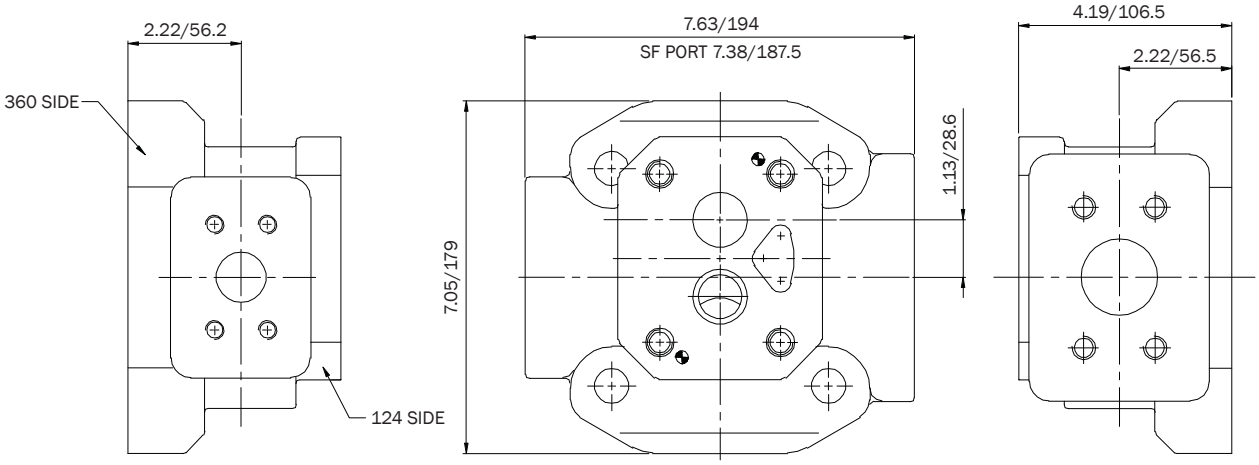

INCHES/MM *CW VIEW SHOWN*

NFPA Solutions through motion technology

The Sensible Choice

Hydraulic/Pneumatic Products

1500 Frost Road - Post Office Box 2068 - Streetsboro, Ohio 44241-0869 - (330)626-2801 - Fax: (330)626-2805

To: Permco Distributors ***October 19, 2009***

Subject: Transition Covers 360/197 Series

In efforts to promote a better understanding of our Transition Covers; listed below are part numbers, descriptions and explanation of those products.

Transition Covers for our 360/197 series offers the ability to combine different bushing series units together in a seamless one piece construction. The Transition Cover is a one piece combination port end cover for the front unit and shaft end cover for the rear unit; this requires fewer parts for assembly and helps keep the overall pump length to a minimum. Common inlet(s) combines flow within both pump series (flows are not segregated). Transition cover assemblies can consist of a single, tandem and/or multiple pumping section for each series. Applications for transition covers can be found on mining equipment, construction machinery equipment, cranes, logging equipment, oil field equipment and any hydraulic system that requires a wide range of hydraulic pump output flows.

CODING EXAMPLE: PB360A067DEZA25-6/P197APEZA15
Refer to preceding pages for more examples of model number constructions.

Transition Cover Components:

PART #	SERIES	DESCRIPTION
*592C-H0003	P360/P197-CW	360/197 TRANSITION COVER CW
*592C-H0004	P360/P197-CCW	360/197 TRANSITION COVER CCW
*022C-H0001	P360/P197	360/197 CONNECTING SHAFT CW/CCW *(1 Required)*
921-01380	360	BUSHING *(2 Required)*
921-00427-P	197	BUSHING *(2 Required)*

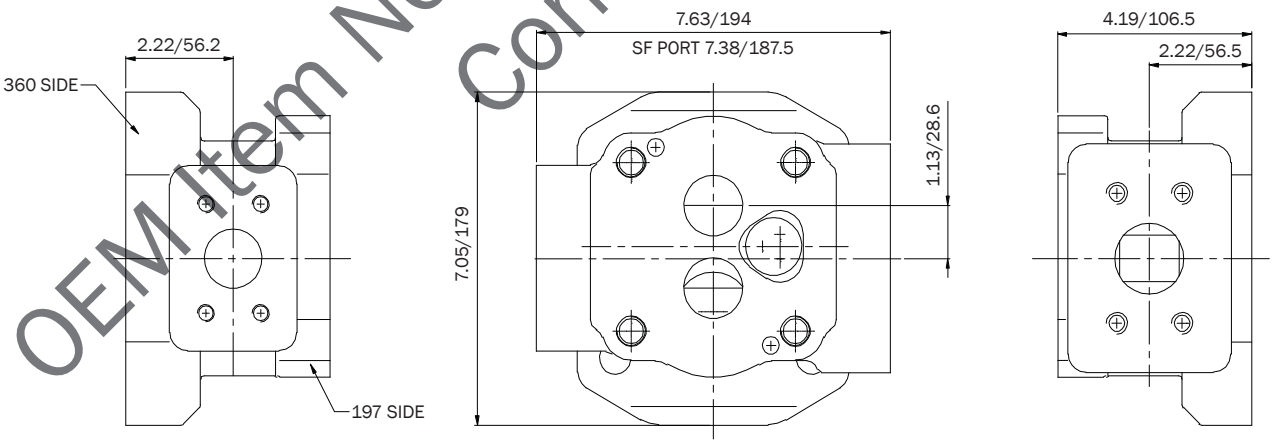

INCHES/MM

**Engineering number, consult factory for actual part number*

CW VIEW SHOWN

OEM Item Not For General Distribution
Consult Factory

NFPA
Solutions through motion technology

The Sensible Choice

Hydraulic/Pneumatic Products

1500 Frost Road - Post Office Box 2068 - Streetsboro, Ohio 44241-0869 - (330)626-2801 - Fax: (330)626-2805

To: Permco Distributors ***October 19, 2009***

Subject: Transition Covers 360/257 Series

In efforts to promote a better understanding of our Transition Covers; listed below are part numbers, descriptions and explanation of those products.

Transition Covers for our 360/257 series offers the ability to combine different bushing series units together in a seamless one piece construction. The Transition Cover is a one piece combination port end cover for the front unit and shaft end cover for the rear unit; this requires fewer parts for assembly and helps keep the overall pump length to a minimum. Common inlet(s) combines flow within both pump series (flows are not segregated). Transition cover assemblies can consist of a single, tandem and/or multiple pumping section for each series. Applications for transition covers can be found on mining equipment, construction machinery equipment, cranes, logging equipment, oil field equipment and any hydraulic system that requires a wide range of hydraulic pump output flows.

CODING EXAMPLE: PB360A067DEZA25-6/P257APEZA15
Refer to preceding pages for more examples of model number constructions.

Transition Cover Components:

PART #	SERIES	DESCRIPTION
*592C-H0005	P360/P257-CW	360/257 TRANSITION COVER CW
*592C-H0013	P360/P257-CCW	360/257 TRANSITION COVER CCW
*022C-H0002	P360/P257	360/257 CONNECTING SHAFT CW/CCW *(1 Required)*
921-01380	360	BUSHING *(2 Required)*
921-00647-P	257	BUSHING *(2 Required)*

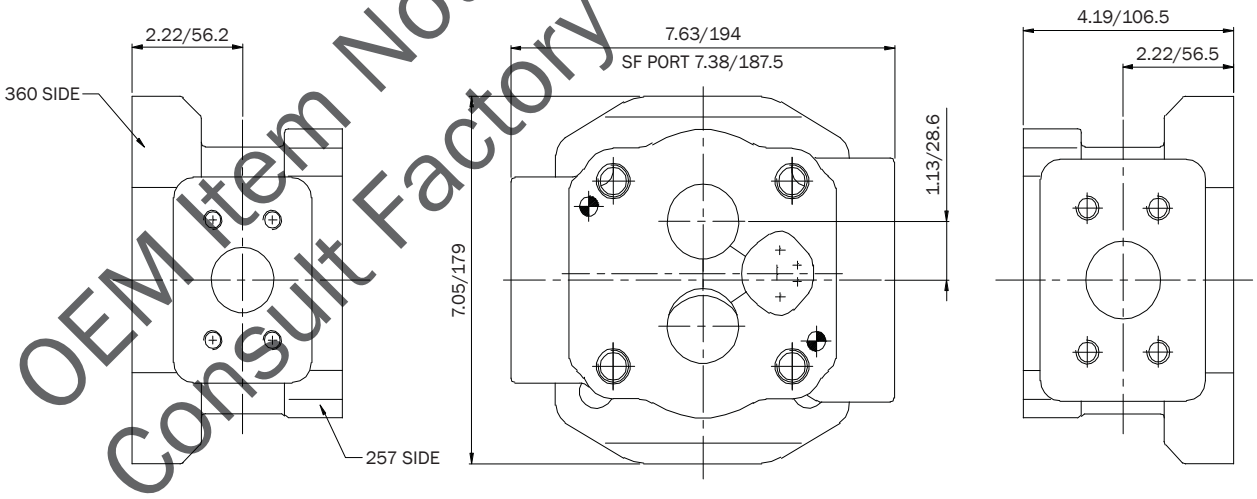

INCHES/MM *CW VIEW SHOWN*

**Engineering number; consult factory for actual part number*

OEM Item Not For General Distribution
Consult Factory

NFPA Solutions through motion technology

The Sensible Choice

Hydraulic/Pneumatic Products

1500 Frost Road - Post Office Box 2068 - Streetsboro, Ohio 44241-0869 - (330)626-2801 - Fax: (330)626-2805

To: Permco Distributors ***October 19, 2009***

Subject: Transition Model Code Description

In efforts to promote a better understanding of our Transition type unit coding system, listed below is an example assembly model code and explanation. *(Transition covers are commonly called Transition Bearing Carriers in the industry.)*

Transition Model Coding

Transition assemblies are model coded starting from the shaft end cover as with any normal multiple unit. Component codes untilized are within the same codes in the Permco Code Books but with a slight variance. "PB" is added at the beginning of the model code to represent a transition style unit and the drive shaft code is left out of its normal position in the secondary (rear) unit model code; component codes underlined below are special to the transition assembly.

Code Explanation:

PB257A067PFZA17-6/P124ADIZA10

PB = Pump Piggyback ("B" denotes transition style unit)
257 = Front pump series
A = Single unit for front assembly
067 = Shaft end cover code
PF = Port code for transition cover (use standard port code from Permco Code Book for 257 series for port end covers)
ZA15 = Gear width
6 = Drive shaft code for front assembly
/P124 = Rear pump series (this determines which transition cover to use and includes connecting shaft in small parts)
A = Single unit for rear assembly
DI =Port code for rear assembly port end cover (use standard port codes from Permco Code Book for 124 series)
ZA10 = Gear width

PB257B067PFZA15-6GBXZA12-1/P124BDIZA10-BKZA05-1

PB = Pump Piggyback ("B" denotes transition style unit)
257 = Front pump series
B = Multiple unit for front assembly
067 = Shaft end cover code
PF = Port code for transition cover (use standard port code from Permco Code Book for 257 series for port end covers)
ZA15 = Gear width
6 = Drive shaft code for front assembly
GBX = Port code for bearing carrier for front assembly
-1 = Connecting shaft for front assembly
/P124 = Rear pump series (this determines which transition cover to use and includes connecting shaft in small parts)
B = Multiple unit for rear assembly
DI =Port code for rear assembly port end cover (use standard port codes from Permco Code Book for 124 series)
ZA10 = Gear width
BK = Port code for bearing carrier for rear section
ZA05 = Gear width
-1 = Connecting shaft for rear assembly

NFPA Solutions through motion technology

The Sensible Choice

Hydraulic/Pneumatic Products

1500 Frost Road - Post Office Box 2068 - Streetsboro, Ohio 44241-0869 - (330)626-2801 - Fax: (330)626-2805

To: All Permco Distributors ***October 19, 2009***

Subject: Add-A-Pump Port End Covers 3000/3100/5000/5100 Series

In efforts to promote a better understanding of our Add-A-Pump Port End Covers; listed below are part numbers, descriptions and explanation of those products.

Add-A-Pump Port End *Covers* for our 3000/3100/5000/5100 series offers the ability to couple other brands and types of pumps to ours and provide segregated flows between working units. The Add-A-Pump Port End Cover is a totally integrated and sealed unit; giving the option of operating with or without a mated pump.
Port End Covers for each series are machined to accept a 2-BOLT-SAE-A (male) mounting flange and a SAE-A-SPLINE (male) or SAE-B-SPLINE (male) mating shaft. Match up and utilize the series connecting shaft type (female) with the output shaft type (male) of the pump to be mounted.
Special internal wrench nuts are required for the port end cover; please order (2) of part number (900-00238-IWN) for final assembly. Refer to drawing numbers (592-00481-PBA) 3000/3100 or (592-00482-PBA) 5000/5100 for port end cover assembly parts list.
Refer to Permco Series Code Books when constructing model numbers and to identify piece parts for coding and assembly; because Add-A-Pump port end cover is special with no existing code consult factory for assistance.

Add-A-Pump Port End Covers (PEC) 3000/3100

PART #	SERIES	PORT END COVER FLANGE TYPE	PORT END COVER CODE	CONNECTING SHAFT # SERIES AND TYPE
VA-0574-24	3000	2-BOLT-A (Female) CW & CCW	MZ LZ	ZJ-0022-3000-A-SPLINE (Female) ZB-0022-3000-B-SPLINE (Female)
VA-0574-24D	3100	2-BOLT-A (Female) CW & CCW	MZ LZ	ZJ-0022-3100-A-SPLINE (Female) ZB-0022-3100-B-SPLINE (Female)

Add-A-Pump Port End Covers (PEC) 5000/5100

PART #	SERIES	PORT END COVER FLANGE TYPE	PORT END COVER CODE	CONNECTING SHAFT # SERIES AND TYPE
ZA-0574-24	5000	2-BOLT-A (Female) CW & CCW	MZ LZ	ZH-0022-5000-A-SPLINE (Female) ZK-0022-5000-B-SPLINE (Female)
ZA-0574-24D	5100	2-BOLT-A (Female) CW & CCW	MZ LZ	ZH-0022-5100-A-SPLINE (Female) ZK-0022-5100-B-SPLINE (Female)

NFPA Solutions through motion technology

The Sensible Choice

Hydraulic/Pneumatic Products

1500 Frost Road - Post Office Box 2068 - Streetsboro, Ohio 44241-0869 - (330)626-2801 - Fax: (330)626-2805

To: All Permco Distributors — October 19, 2009

Subject: Add-A-Pump Port End Covers 197/257/360 Series

In efforts to promote a better understanding of our Add-A-Pump Port End Covers; listed below are part numbers, descriptions and explanation of those products.

Add-A-Pump Port End *Covers* for our 197/257/360 series offers the ability to couple other brands and types of pumps to ours and provide segregated flows between working units. The Add-A-Pump Port End Cover is a totally integrated and sealed unit; giving the option of operating with or without a mated pump.
Port End Covers dependent on series are machined to accept either a 2-BOLT-SAE-A (male) or 2-BOLT-SAE-B (male) mounting flange and a SAE-A-SPLINE (male) or SAE-B-SPLINE (male) mating shaft. Match up the Port End Cover (female) flange type and size with the mating pump flange (male) type and size and match up the connecting shaft (female) type and size with the mating pump output shaft (male) type and size.
The 197 series has assembly part numbers for CW & CCW rotation Port End Covers; these assembly part numbers include all necessary parts and pieces for the 197 Port End Cover assembly with an A-SPLINE connecting shaft.

Refer to proceding page drawings to identify piece parts for assembly; consult factory for assistance.
Refer to Permco Series Code Books when constructing model numbers.
For coding start model numbers with “PB” for pumps or “MB” for motors; this identifies the unit as an Add-A-Pump Port End Cover assembly.
For coding use standard port end cover port codes followed by an “AA”, “AB”, “BA” OR “BB”; [EX: (PPBB)].
“PP” (First two letters) equal port type and size (PP = 2” x 1-1/4” Split Flange)
“A” (Third letter) equal SAE-A-2-Bolt Flange
“B” (Third letter) equal SAE-B-2-Bolt Flange
“A” (Forth letter) equal SAE-A-Spline Connecting Shaft
“B” (Forth letter) equal SAE-B-Spline Connecting Shaft

EX: PB257A031(PPBB)ZA20-14; Place all four letter in ()
The above unit is an Add-A-Pump assembly with a 2” x 1-1/4” Split Flange port with a SAE-B-2-Bolt Flange and a SAE-B-Spline Connecting Shaft.

Add-A-Pump Port End Covers (PEC)

PART #	SERIES	PORT END COVER	CONNECTING SHAFT #
592-01440-0	197	2-BOLT-A-CW	022-01442 A-SPLINE
592-01441-0 (Assembly #)			
592-01440-1	197	2-BOLT-A-CCW	022-01442 A-SPLINE
592-01441-1 (Assembly #)			
592-01278-0-2A	257	2-BOLT-A-CW	022-01280 A-SPLINE
592-01278-1-2A	257	2-BOLT-A-CCW	022-01280 A-SPLINE
592-01278-0-2B	257	2-BOLT-B-CW	022-01279 B-SPLINE
592-01278-1-2B	257	2-BOLT-B-CCW	022-01279 B-SPLINE
592-01437-0-2A	360	2-BOLT-A-CW	022-01439 A-SPLINE
592-01437-1-2A	360	2-BOLT-A-CCW	022-01439 A-SPLINE
592-01437-0-2B	360	2-BOLT-B-CW	022-01438 B-SPLINE
592-01437-1-2B	360	2-BOLT-B-CCW	022-01438 B-SPLINE

Hydraulic/Pneumatic Products

1500 Frost Road - Post Office Box 2068 - Streetsboro, Ohio 44241-0869 - (330)626-2801 - Fax: (330)626-2805

To: Permco Distributors ***October 19, 2009***

Subject: Add-A-Pump Model Code Description

In efforts to promote a better understanding of our Add-A-Pump type unit coding system, listed below is an example assembly model code and explanation.

Add-A-Pump Model Coding

Add-A-Pump assemblies are model coded starting from the shaft end cover as with any normal multiple unit. Component model codes are basically the same as any standard assembly model and follow the same sequence; basic component codes can be found in the Permco Code Books; underlined component codes below are special to add-a-pump type units.

Code Explanation:

Refer to approperate series Permco Series Code Books when constructing model numbers.
For coding start model numbers with “PB” for pumps or “MB” for motors; this identifies the unit as an Add-A-Pump Port End Cover assembly.
For coding use standard port end cover port codes followed by an “AA”, “AB”, “BA” OR “BB”; [EX: (PPBB)].
“PP” (First two letters) equal port type and size (PP = 2” x 1-1/4” Split Flange)
“A” (Third letter) equal SAE-A-2-Bolt Flange
“B” (Third letter) equal SAE-B-2-Bolt Flange
“A” (Forth letter) equal SAE-A-Spline Connecting Shaft
“B” (Forth letter) equal SAE-B-Spline Connecting Shaft

EX: PB257A031(PPBB)ZA20-14; Place all four letter in ()
The above unit is an Add-A-Pump assembly with a 2” x 1-1/4” Split Flange port with a SAE-B-2-Bolt Flange and a SAE-B-Spline Connecting Shaft.

NFPA
Solutions through motion technology

The Sensible Choice

ITEM NO.	QTY.	PART NO.	DESCRIPTION
1	1	VA-0574-24	PORT END COVER
2	2	L-0280-K	CHECK VALVE ASSY.
3	1*	ZB-0022	13 T CONNECTOR SHAFT
4	1*	ZJ-0022	9 T CONNECTOR SHAFT
5	1	W58-47	BALL BEARING
6	1	W023-283	RETAINING RING
7	1	W62-26-17	SEAL
8	1	KA-0558-1XS	RING SEAL
9	2	X-0921	CROWNED ROLLER BEARING
10	2	900-00328-IWN	INTERNAL WRENCH NUT

* Depending upon what drive shaft is used, only one connecting shaft is required.

MAX. SHAFT EXT. FOR MATING PUMP	
SHAFT	EXTENSION
9 TOOTH	1.687 in.
13 TOOTH	1.719 in.

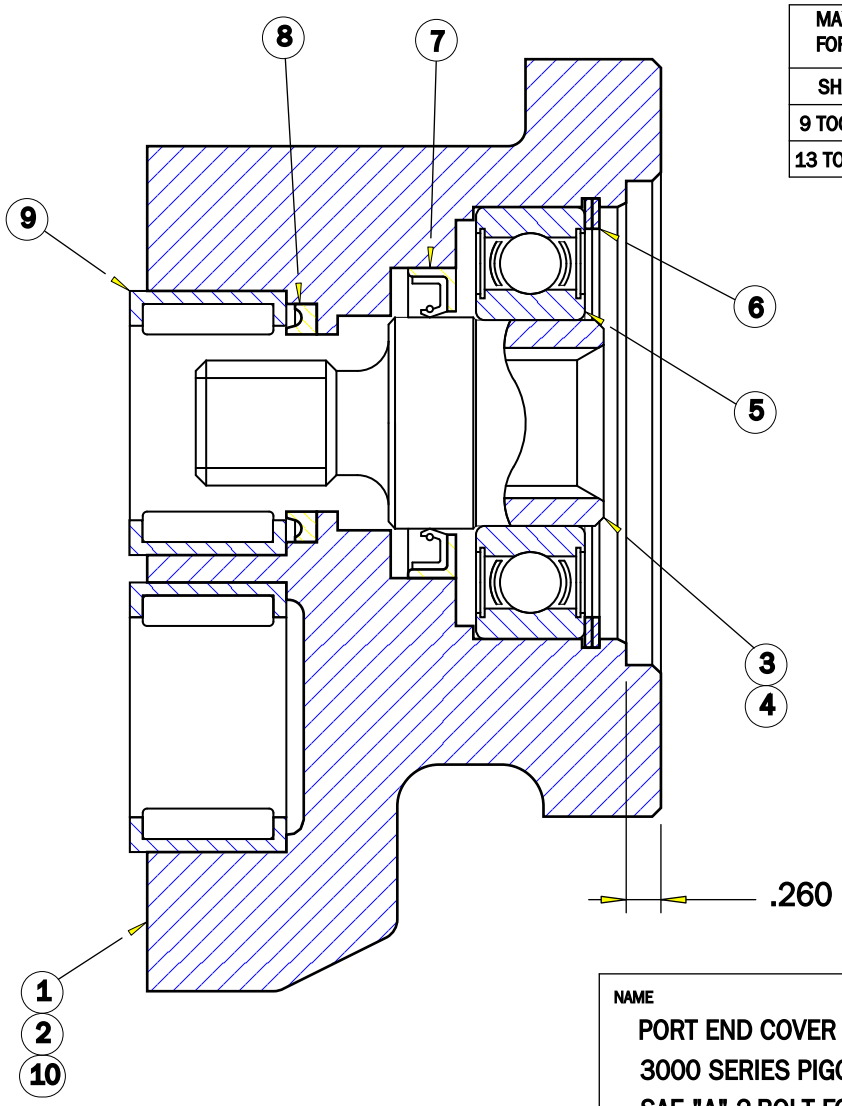

NAME

PORT END COVER ASSEMBLY
3000 SERIES PIGGY BACK
SAE "A" 2-BOLT FOR 9 & 13
TOOTH SPLINE SHAFTS

ASSEMBLY NO.

592-00481-PBA

Copyright © 1989 Permco, Inc.

ITEM NO.	QTY.	PART NO.	DESCRIPTION
1	1	ZA-0574-24	PORT END COVER
2	2	L-0280-K	CHECK VALVE ASSY.
3	1 *	ZK-0022	13 T CONNECTOR SHAFT
4	1 *	ZH-0022	9 T CONNECTOR SHAFT
5	1	W58-47	BALL BEARING
6	1	W023-283	RETAINING RING
7	1	W62-26-17	SEAL
8	1	MA-0558-1XS	RING SEAL
9	2	R-0921	CROWNED ROLLER BEARING
10	2	900-00328-IWN	INTERNAL WRENCH NUT

* Depending upon what drive shaft is used, only one connecting shaft is required.

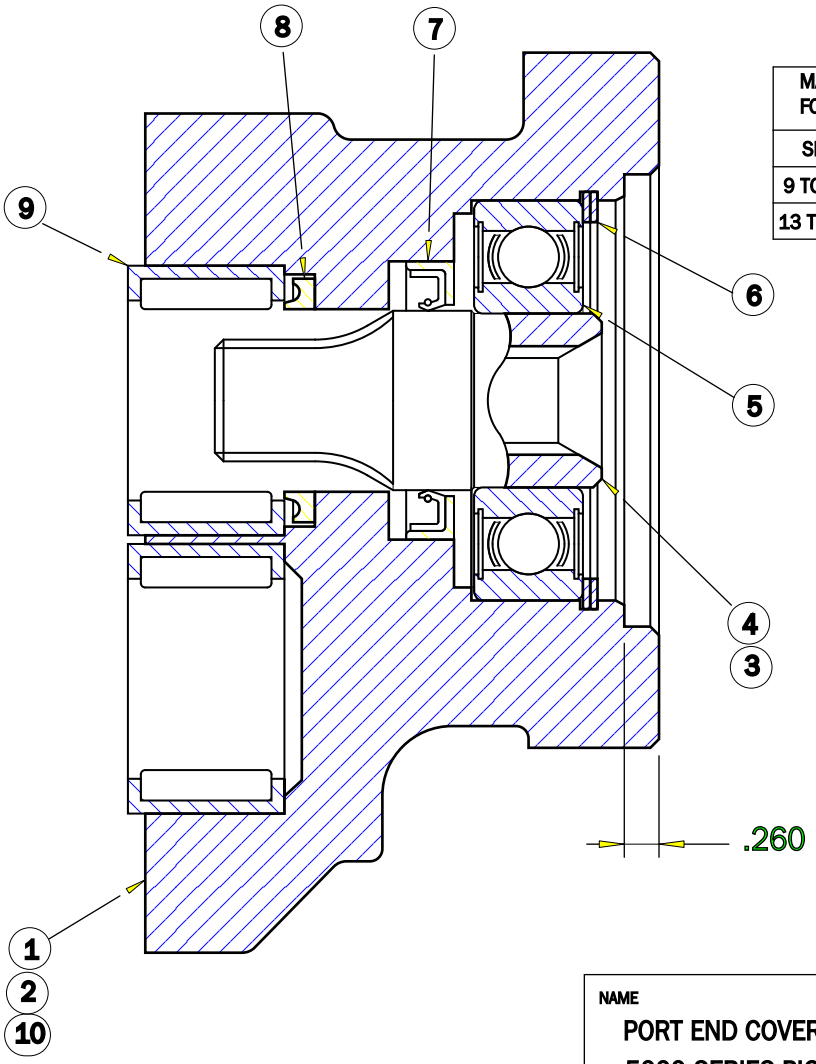

MAX. SHAFT EXT. FOR MATING PUMP	
SHAFT	EXTENSION
9 TOOTH	1.437 in.
13 TOOTH	1.719 in.

NAME

PORT END COVER ASSEMBLY
5000 SERIES PIGGY BACK
SAE "A" 2-BOLT FOR 9 & 13
TOOTH SPLINE SHAFTS

ASSEMBLY NO.

592-00482-PBA

Copyright © 1989 Permco, Inc.

ITEM	PART NUMBER	DESCRIPTION	REQ'D
1.	592-01440-0	PEC, 2 BOLT A FLANGE, CW	1
	592-01440-1	PEC, 2 BOLT A FLANGE, CCW	
2.	022-01442	CONNECTING SHAFT, A SPLINE	1
3.	921-01281	BALL BEARING	1
4.	565-01282	RETAINING RING	1
5.	W62-26-17	SHAFT SEAL	1
6.	565-01194	1/4" ORB PLUG	1
7.	921-00427-P	BUSHING	2
8.	SEE NOTE	FASTENERS	4

NOTE

SINGLE FASTENERS

2-BOLTS 1.50" LONGER THAN STANDARD BOLTS
2-STUDS 2.00" LONGER THAN STANDARD BOLTS
2-NUTS P.N. W3-65
4-WASHERS P.N. W033-2

TANDEM FASTENERS

STUDS 1.50" LONGER THAN STANDARD STUDS
4-NUTS P.N. W3-65
4-WASHERS P.N. W033-2

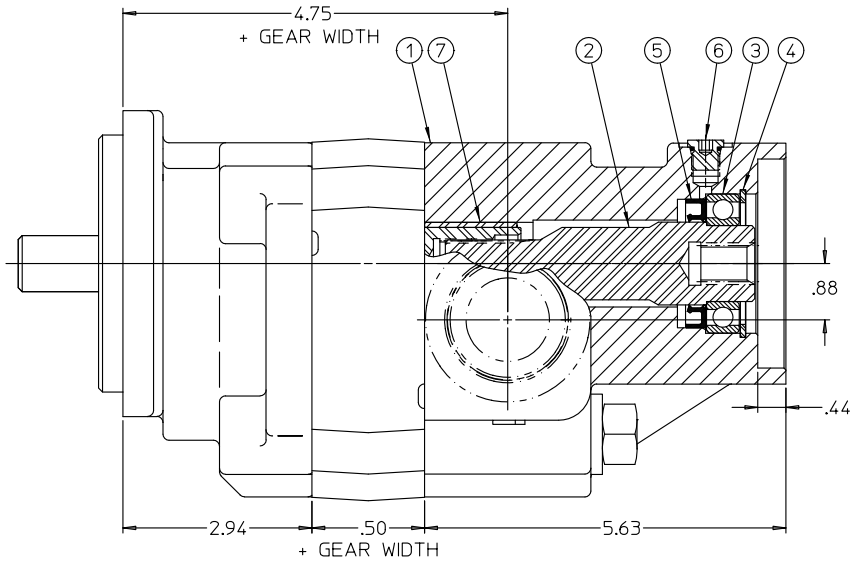

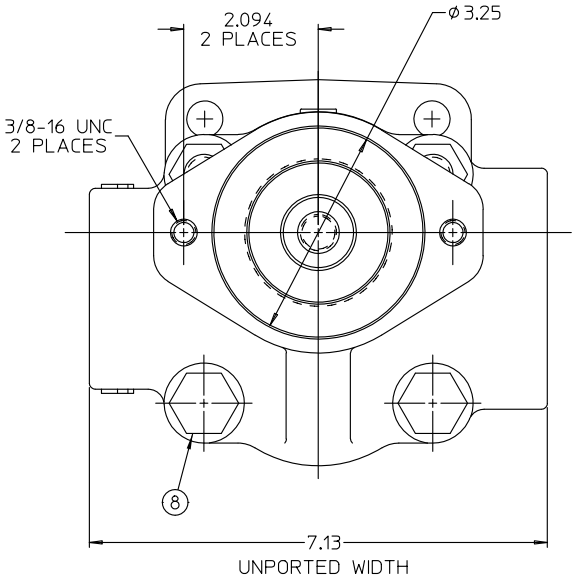

SHOWN AS CLOCKWISE ROTATION

REV.	BY	DATE	ECN NO.	DESCRIPTION
-	JBA	03-03-06	21415	NEW RELEASE

DO NOT SCALE DRAWING

THIS PRINT AND THE DESIGN AND DETAIL SHOWN HEREON ARE THE PROPERTY AND INVENTION OF PERMCO, INC. THIS PRINT IS FURNISHED WITH THE UNDERSTANDING THAT IT IS NOT TO BE TRANSFERRED, TRACED, REPRODUCED, STORED IN A RETREVAL SYSTEM OR TRANSMITTED, IN ANY FORM OR BY ANY MEANS, ELECTRONIC, MECHANICAL, PHOTOCOPYING, RECORDING OR OTHERWISE WITHOUT PRIOR WRITTEN PERMISSION OF PERMCO, INC. AND IS RETURNABLE UPON DEMAND. ALL RIGHTS OF DESIGN AND INVENTION ARE RESERVED BY PERMCO, INC.

MATERIAL #
HEAT TREAT #
MAKE FROM #

UNLESS OTHERWISE SPECIFIED

1. DIMENSIONS ARE IN INCHES.
2. TOLERANCE ON DIMENSIONS
   1-PLACE X = ± .06
   2-PLACE XX = ± .03
   3-PLACE XXX = ± .010
3. TOLERANCE ON ANGLES ± 1/2°
4. ALL DIA's ON SAME C/L RUNOUT NO MORE THAN .005 TIR
5. REMOVE ALL BURRS AND BREAK ALL SHARP EDGES .005/.015. 125 RMS FINISH ON ALL MACHINED SURFACES.
6. MACHINED FILLET RADII .005/.015.

SCALE NTS DRAWING SIZE A

NAME: 197 PORT END COVER, PIGGY BACK, 2 BOLT A FLANGE, A SPLINE, ASSEMBLY

SUPERSEDES | SUPERSEDED BY

DRAWN BY JBA DATE 03-03-06 | CHECKED BY DATE | APPROVED BY DATE

PERMCO®
1500 Frost Road
Streetsboro, Ohio 44241

DRAWING NO. 592-01441

SHEET NO. 1 of 1 REVISION -

ITEM	PART NUMBER	DESCRIPTION	REQ'D
1.	SEE TABLE 1	PORT END COVER	1
2.	SEE TABLE 2	CONNECTING SHAFT	1
3.	921-01281	BALL BEARING	1
4.	565-01282	RETAINING RING	1
5.	W62-26-17	SHAFT SEAL	1
6.	565-01194	1/4" ORB PLUG	1
7.	921-00647-P	BUSHING	2
8.	SEE TABLE 3	FASTENERS	4

TABLE 1

DESCRIPTION	PORT END COVER PART NUMBER	DIMENSIONS A	B	C
2 BOLT A FLANGE	592-01278-2A	3.250	2.094	3/8-16 UNC-2B x .875
2 BOLT B FLANGE	592-01278-2B	4.000	2.875	1/2-13 UNC-2B x 1.000
2 BOLT A FLANGE, CW	592-01278-0-2A	3.250	2.094	3/8-16 UNC-2B x .875
2 BOLT A FLANGE, CCW	592-01278-1-2A	3.250	2.094	3/8-16 UNC-2B x .875
2 BOLT B FLANGE, CW	592-01278-0-2B	4.000	2.875	1/2-13 UNC-2B x 1.000
2 BOLT B FLANGE, CCW	592-01278-1-2B	4.000	2.875	1/2-13 UNC-2B x 1.000

TABLE 2

INTERNAL SPLINE TYPE	SHAFT PART NUMBER
9 TOOTH SAE A	022-01280
13 TOOTH SAE B	022-01279

TABLE 3

SINGLE FASTENERS
2-BOLTS 1.50" LONGER THAN STANDARD PUMP ASSEMBLY 2-STUDS 2.00" LONGER 2-NUTS P.N. W3-65 4-WASHERS P.N. W033-2
TANDEM FASTENERS
FLUSH STUDS 1.50" LONGER THAN STANDARD PUMP ASSEMBLY EXTENDED STUDS 3.50" LONGER 4-NUTS P.N. W3-65 4-WASHERS P.N. W033-2

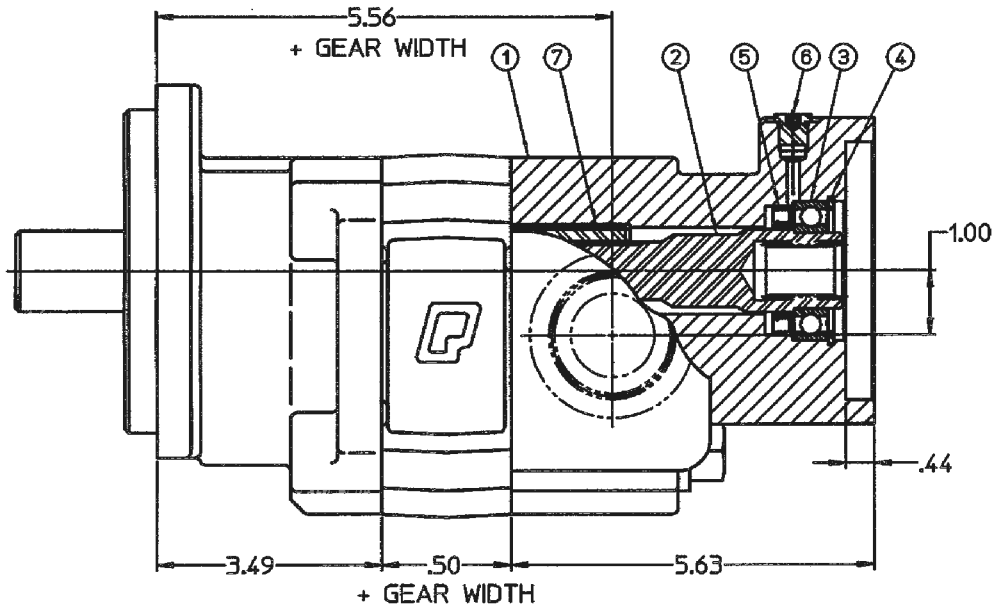

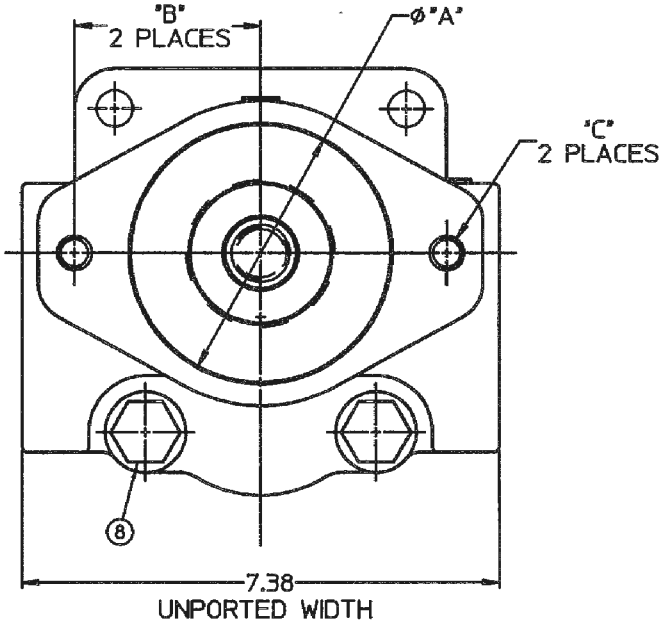

REV.	BY	DATE	ECN NO.	DESCRIPTION
-	JBA	05-07-03	21192	NEW RELEASE

DO NOT SCALE DRAWING

NAME: 257 PORT END COVER, PIGGY BACK, 2 BOLT A OR B FLANGE, A OR B SPLINE, ASSEMBLY

FRENCO
1300 Frost Road
Streetsboro, Ohio 44241

DRAWN BY: JBA 05-07-03

DRAWING NO. 592-01302

SCALE 1:1 SIZE A

SHEET NO. 1 of 1

ITEM	PART #	DESCRIPTION	QTY
1	SEE TABLE 1	PORT END COVER	1
2	SEE TABLE 2	CONNECTING SHAFT (C/S)	1
3	921-01380	BUSHING	2
4	W033-2	WAHSERS	4
5	SEE TABLE 3	CAP SCREWS	2
6	SEE TABLE 3	STUDS	2
7	W62-26-17	SHAFT SEAL	1
8	565-01194	PLUG	1
9	921-01281	BALL BEARING	1
10	565-01282	RETAINER RING	1
11	SEE TABLE 4	O-RING (OPTIONAL)	1

TABLE 1

DESCRIPTION	PEC PART #	DIMENSIONS A	B	C
2 BOLT SAE A FLANGE CW	592-01437-0-2A	3.250	2.094	3/8-16 UNC-2B X .875
2 BOLT SAE A FLANGE CCW	592-01437-1-2A	3.250	2.094	3/8-16 UNC-2B X .875
2 BOLT SAE B FLANGE CW	592-01437-0-2B	4.000	2.875	1/2-13 UNC-2B X 1.000
2 BOLT SAE B FLANGE CCW	592-01437-1-2B	4.000	2.875	1/2-13 UNC-2B X 1.000

TABLE 2

SHAFT (C/S)	SHAFT PART #
9 TOOTH SAE A	022-01439
13 TOOTH SAE B	022-01438

TABLE 3

SINGLE FASTENERS	TANDEM FASTENERS
USE (2) STANDARD CAP SCREWS AND (2) STUDS ALONG WITH (4) WASHERS AND (2) NUTS TO COMPLETE ASSEMBLY	FOR MULTIPLE SECTIONS USE (4) STUDS WITH (4) WASHERS AND (4) NUTS
STUDS LENGTHS PER SINGLE ASSEMBLY: 5-1/2" FOR 1" GEAR 6" FOR 1-1/4" AND 1-1/2" GEAR 6-1/2" FOR 1-3/4" AND 2" GEAR 7" FOR 2-1/4" AND 2-1/2" GEAR	ADD 4-1/2" FOR EACH BEARING CARRIER PLUS TOTAL GEAR WIDTH TO SINGLE ASSEMBLY STUD LENGTHS
2-NUTS PART # W3-65 4-WASHERS PART # W033-2	

TABLE 4

DESCRIPTION	O-RING PART #
SAE-A FLANGE PILOT O-RING	CONSULT FACTORY (-152 O-RING)
SAE-B FLANGE PILOT O-RING	CONSULT FACTORY (-155 O-RING)

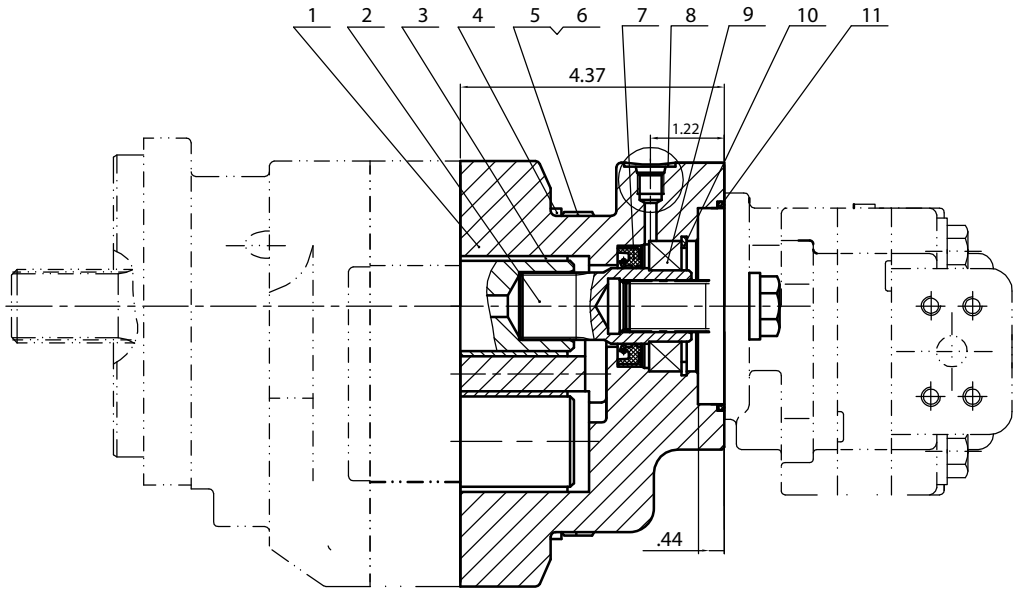

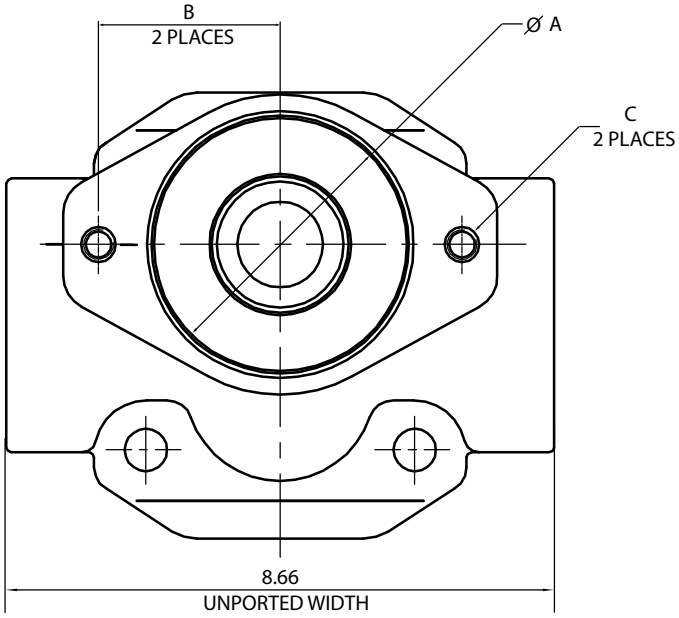

PERMCO

360 PORT END COVER
ADD-A-PUMP PIGGY/BACK
2-BOLT-A OR B FLANGE
A OR B SPLINE ASSEMBLY

5/13/2010

124 SERIES BUSHINGS DO NOT HAVE LUBE GROOVES; BUSHINGS ARE INSERTED WITH BUTT JOINTS AT 12:00 O-CLOCK AND 6:00 O-CLOCK
USE PART NUMBER T-1194 ASSEMBLY FOR PROPER BUSHING INSTALLATION
T-1194 = BUSHING INSERTION ASSEMBLY (INCLUDES T-1192 AND T-1193)
T-1192 = BUSHING INSERTION TOOL
T-1193 = BUSHING INSERTION GUIDE
T-1195 = BUSHING REMOVAL COLLET

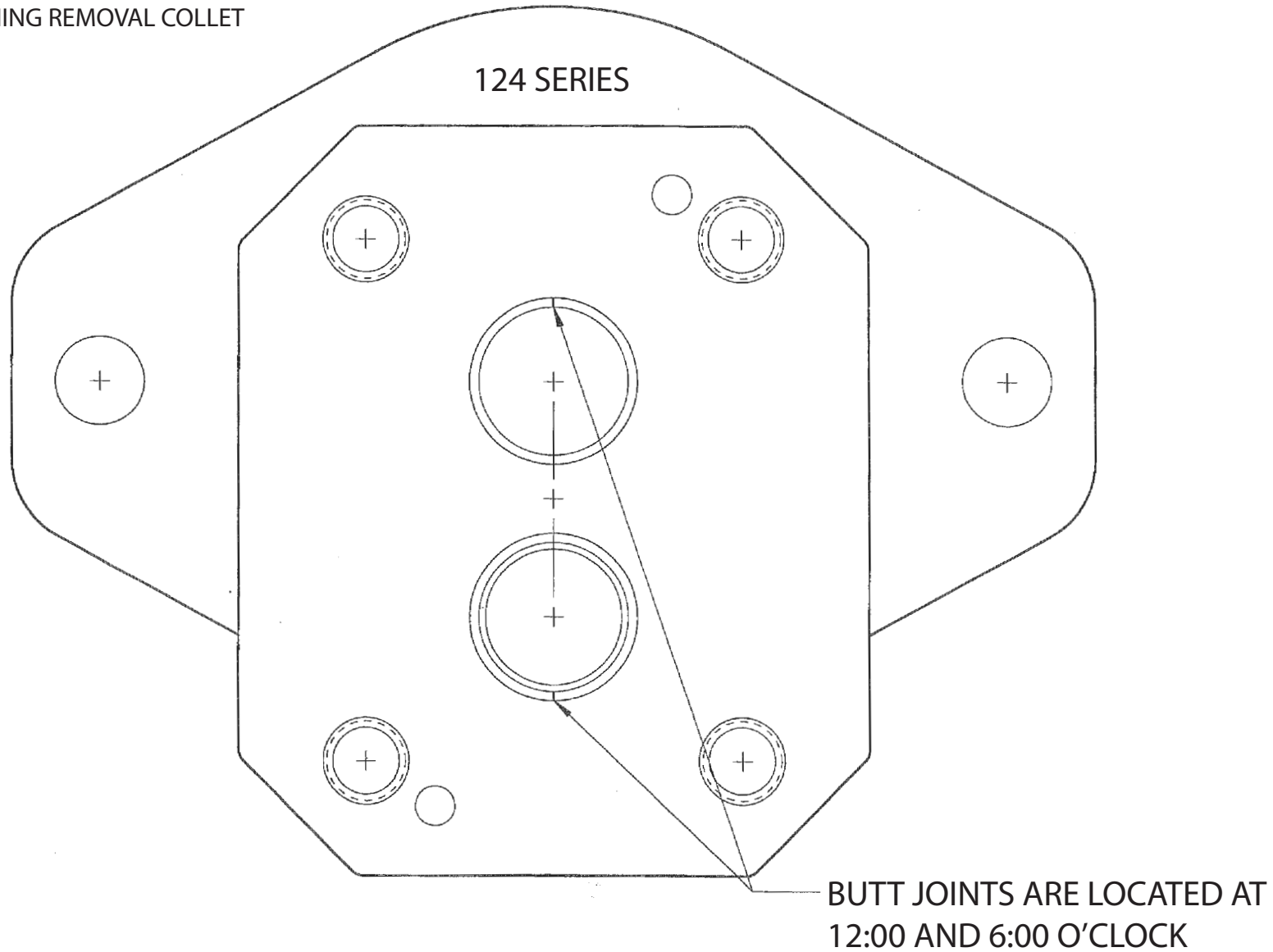

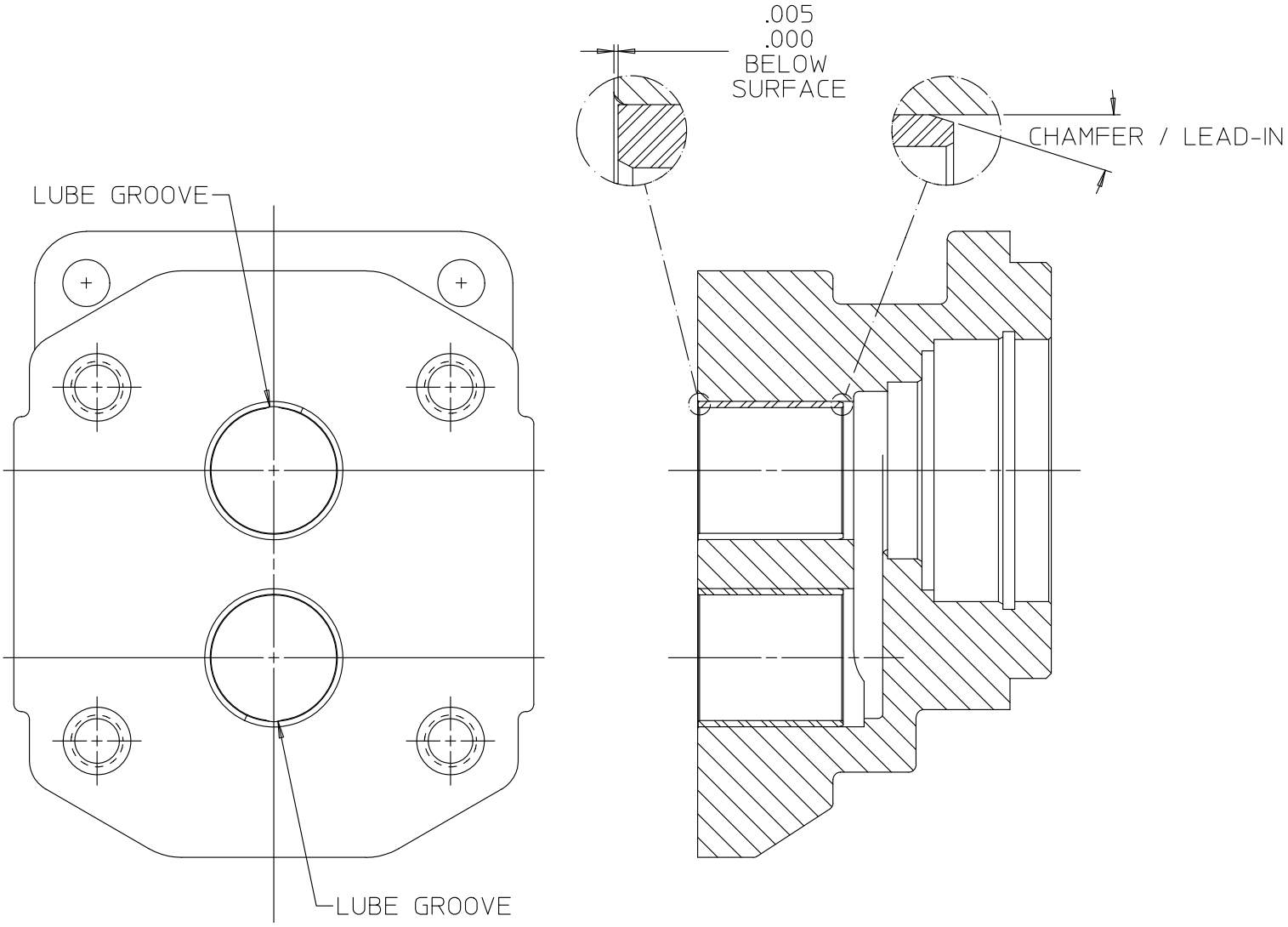

P360 ASSEMBLY NOTES:

1) ASSEMBLE BUSHINGS AS SHOWN. LUBE GROOVES AT 12:00 AND 6:00 O-CLOCK. BUSHING OD CHAMFER / LEAD-IN IS DOWN, AND SQUARE CORNER MUST BE FLUSH TO .005" BELOW THE SURFACE. REGARDLESS OF BUSHING SPLIT ORIENTATION. USE T-1199 TO ENSURE PROPER INSTALLATION DEPTH.
2) TORQUE 5/8" BOLTS TO 250 LB-FT.

SK-121405-JA1
REVISION -

HYDRAULIC / PNEUMATIC PRODUCTS
1500 Frost Road · Post Office Box 2068 · Streetsboro, Ohio 44241-0869 · 330/626-2801 · Fax: 330/626-2805

To: All Permco Distributors **Date: March 10, 2010**

Subject: TELL-TALE DRAIN SEAL BREAKDOWN

When coding a pump with a tell-tale seal, the letter after the pump series should be a "D". Example: (P5000D)

The shaft end cover should be noted in the bill of materials description as "with tell-tale drain". The location of this drain can be found on drawing number T-1033 in the porting drawing book.

If required the tell-tale drain hole can be tapped with a 1/8" NPT port.

197 / 2100 / 3000 / 3100 SERIES

QTY	PART NUMBER	DESCRIPTION
1	MZ-0961-1	SEAL RETAINER "TELL-TALE"
1	K-2995-109	SEAL RETAINER TELL-TALE O'RING
1	W023-206	RETAINING RING (SNAP RING)
1	W62-26-18	DOUBLE LIP SEAL "TELL-TALE" (OUTER)
1	W0-19	1/8" NPT PIPE PLUG (IF REQUIRED)

5000 / 5100 / 257 SERIES

QTY	PART NUMBER	DESCRIPTION
1	SR-0961-5	SEAL RETAINER "TELL-TALE"
1	K-2995-164	SEAL RETAINIER TELL-TALE O'RING
1	W023-283	RETAINING RING (SNAP RING)
1	W62-26-4	DOUBLE LIP SEAL "TELL-TALE" (OUTER)
1	W0-19	1/8" NPT PIPE PLUG (IF REQUIRED)

7500 / 7600 SERIES

QTY	PART NUMBER	DESCRIPTION
1	W62-26-10	DOUBLE LIP SEAL "TELL-TALE" (OUTER)
1	W0-19	1/8" NPT PIPE PLUG (IF REQUIRED)

PERMCO HYDRAULIC/PNEUMATIC PRODUCTS

Engineering Bulletin 2005-1

1500 Frost Rd
Post Office Box 2068 10/21/2005 3:11 PM
Streetsboro, Ohio 44241
(330) 626-2801
(330) 626-2805

TO: All Distributors
Cc: Sales, Manufacturing, Assembly DATE: 7/21/2006

Ref: Tell-Tale Retainer Permco part number:

MZ-0961

After existing stock is depleted Permco will discontinue stocking the MZ-0961 retainer
Permco will replace it with

MZ-0961-1

Reason for Change:
The old retainer required a seal with a non-standard can diameter of 1.500″ (W62-26-15)

The new retainer will have a diameter of 1.686” allowing the use of all standard seals.

Please order shaft seals for this retainer as follows.

The new retainer will allow the following seals to now be installed on the integral drive shaft:
W62-26-18 Standard integral pump seal
W62-49-11 Standard motor seal
W62-34-18 Standard Viton pump seal

Permco Engineering Department
David Earls

Rev1 6/2/2006
Corrected seal part numbers to reflect seals with 1″ diameter lip.

The information contained in this facsimile message is property of Permco and confidential information intended only for the recipient named above. If the reader of this message is not the intended recipient, or agent responsible to deliver it to the intended recipient, you are hereby notified that any dissemination, distribution or copying of this documents or its contents are strictly prohibited. If you have received this document in error, please immediately notify us by telephone and return this original facsimile to use at the address via the U.S. Postal Service. Thank you.

FOR 2100, 3000, 3100, 197, 7500, 7600

USE 1/8" (.125) DIA. DRILL THRU IN ANY POSITION
CAPABLE OF BEING DRILLED AND SUITABLE FOR PUMP OPERATION
7/8" (.875) DIA. SPOTFACE AS REQUIRED
LETTER 'Q' (.332) DIA. TAP DRILL
1/8 NPT TAP

FOR 5000, 5100, 257

7/8" (.875) DIA. SPOTFACE AS REQUIRED
LETTER 'Q' (.332) DIA. TAP DRILL TO BREAK THRU AS SHOWN.
1/8 NPT TAP

NAME BLEED HOLE LOCATION TELL-TALE S.E.C.			PERMCO® 1500 Frost Road Streetsboro, Ohio 44241
SUPERSEDES	SUPERSEDED BY		DRAWING NO. T-1033
DRAWN BY DAE	CHECKED BY	APPROVED BY	
DATE 4-9-97	DATE	DATE	SHEET NO. 1 of 1 REVISION A

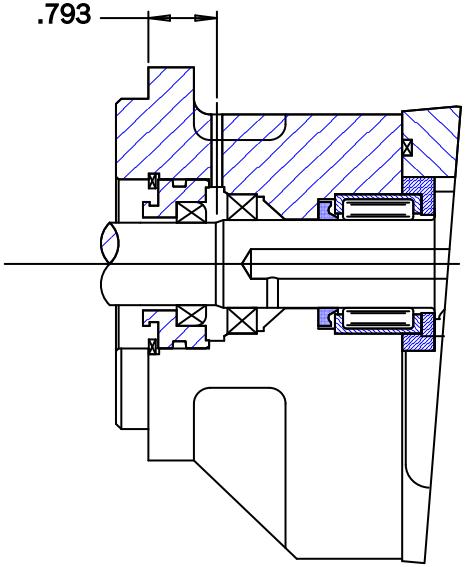

2100, 3000, 3100
197 SERIES

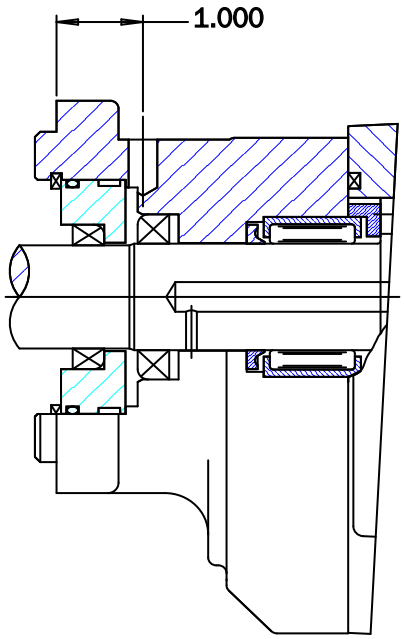

5000, 5100
257 SERIES

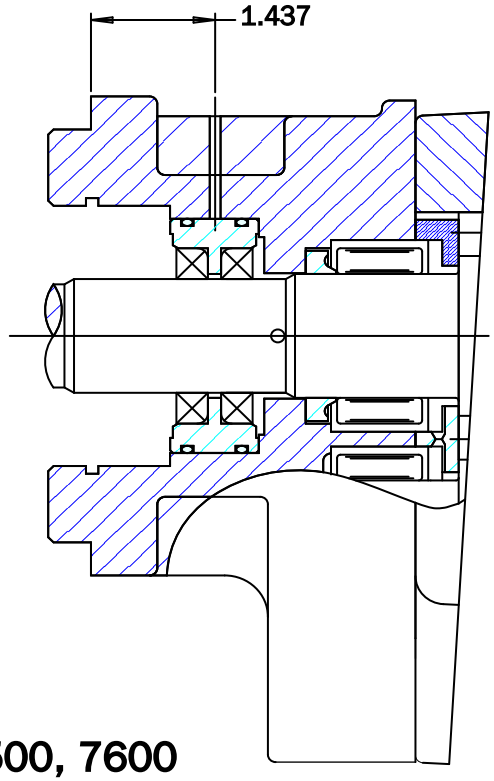

7500, 7600
SERIES

Loctite Retaining Compound
And
LPS Solvent

To assist our customers in attaining the best possible results with Loctite retaining compound, we now offer an LPS Solvent that we have tried, tested and found to give excellent results. This solvent is used, not only for seal installation but also for locking housings to adjacent sections for added strength and durability. We have some customers that specify Loctite between the sections. Model numbers for Loctite units will have a number 4 as the third digit of the model number, i.e., 3040, 5040, or 7540.

The two products we now offer are:

1. LPS Presolve (Permco Part # LPS-100). LPS Presolve is a general purpose, industrial cleaning solvent. It's ideal for preparing surfaces prior to using adhesives and solvents. LPS removes all traces of grease and oils, and leaves no residue; ideal for delicate instruments and precision parts. LPS Presolve is not harmful to the ozone and is low in toxicity.

2. Loctite R/C 680 (Permco Part # LT-680) Loctite Retaining Compound #680 is a medium viscosity fast curing liquid. This Loctite compound fixtures in 10 minutes at room temperature. It provides shear strength of 4000 PSI on steel.

LOCTITE INSTRUCTIONS

3040, 5040, AND 7540 SERIES - GEAR HOUSING

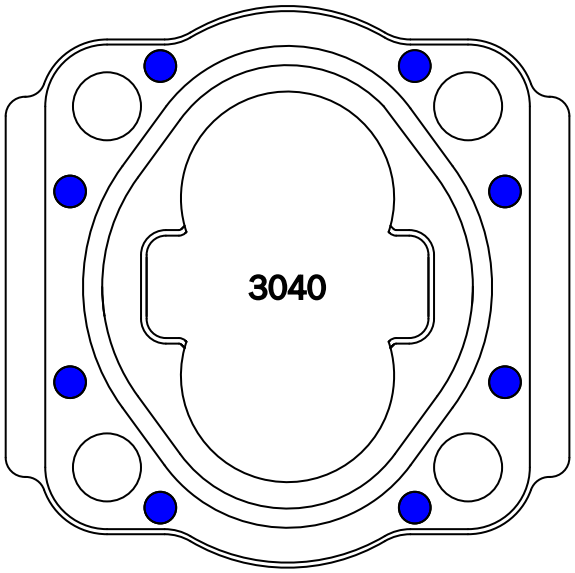

INSTRUCTIONS

1. DEGREASE SURFACE PER INDUSTRIAL GRADE LOCTITE 680 INSTRUCTIONS.
2. APPLY DROPS OF LOCTITE 680 APPROXIMATELY Ø 5/16 (8.0 mm) AS SHOWN BELOW.
3. ASSEMBLY OF LOCTITED PARTS SHOULD BE COMPLETED IN LESS THAN 10 MINUTES.

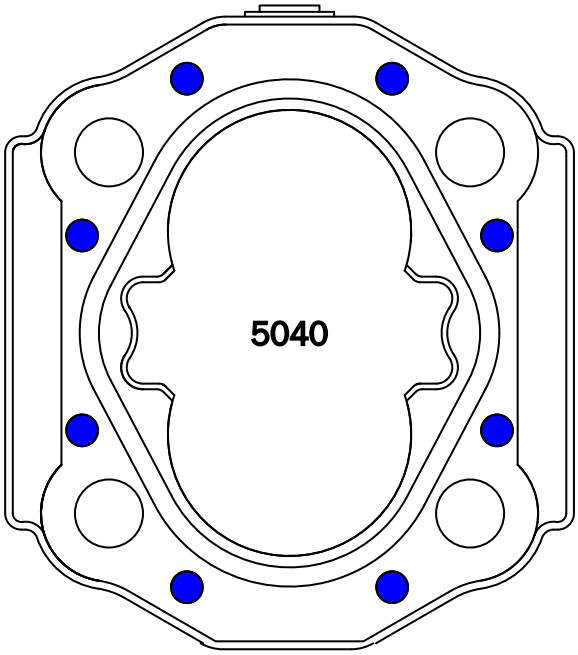

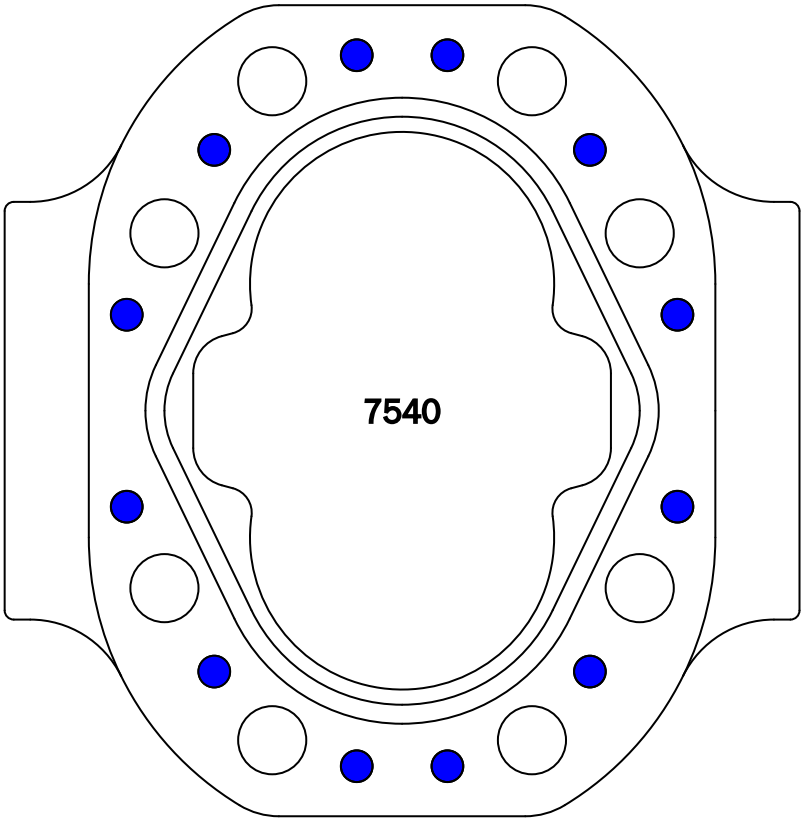

LT-1

PERMCO PAINT

As a convenience to you, Permco has made available our blue pump and motor paint in 12 oz. aerosol cans. This will make it easy to touch up new and rebuilt units, as well as change castings while still maintaining the factory applied color.

The part numbers are as follows:

Part #	Description
427	P/M Blue Paint
427-12	Case of 12 Cans, P/M Blue Paint
427-E	P/M Blue Paint Enamel

Standard replacement parts discounts will apply. Please contact our inside sales department to place an order.

ELECTRIC CLUTCH PUMP ACCESSORIES

SERIES
CP124/P2100/P3000/P3100

By using this power unit arrangement mounted in line with the engine belt train, continuous hydraulic power is available whenever the vehicle is stationary or moving. Typical applications include: snowplows, spreaders, dump bodies, wreckers, agricultural equipment, winches, cranes, etc.

The electric clutches are for 12-volt D.C. operation and except our 7/8" diameter tapered shaft with female threaded end.

PART #	DESCRIPTION
512010	120 Ft. Lb. Static Torque[1] AA Groove
520226	120 Ft. Lb. Static Torque[1] 6 Groove Type K
515376	120 Ft. Lb. Static Torque[1] 8 Groove Type K
BR549	Mounting Bracket (3/4" Thick) Accepts SAE-2-Bolt-A Pump Mount
999-956	Clutch Pump Switch Kit

P2100/P3000/P3100 Series require an outboard bearing, SAE-2-Bolt-A shaft end cover (Code 583[2]) and our 7/8" diameter tapered shaft with female threaded end (Code 21) to be utilized with the BR549 mounting bracket.

PART #	DESCRIPTION
ZP-0024	Code 21 Continental Shaft 7/8" Taper

CP124 Series require a SAE-2-Bolt-A shaft end cover (Code 078 CW Rotation or Code 178 CCW Rotation) and our 7/8" diameter tapered shaft with female threaded end (Code 45 for 3/4" thick mounting bracket (BR549) or Code 99 for 3/8" thick mounting bracket). The CP124 Series is also available with a pad mount shaft end cover (see CP124 Brochure for optional mounting information, model number construction and detailed information).

PART #	DESCRIPTION
024-01284-**	Code 45 Integral Shaft 7/8" Taper
024-01236-**	Code 99 Integral Shaft 7/8" Taper

[1] = After burnishing, see Owner's Manual
[2] = 2 check valve required in shaft end cover; direction of rotation required for proper assembly
** = Inset gear size

124 Series Clutch Bracket

New Competitor Interchange

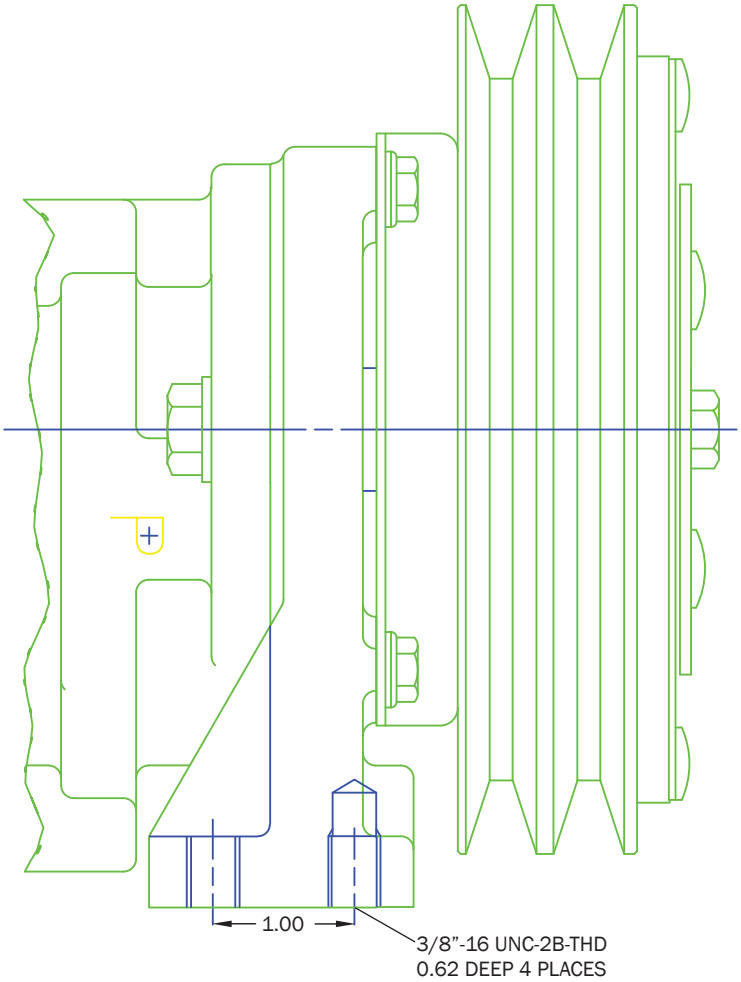

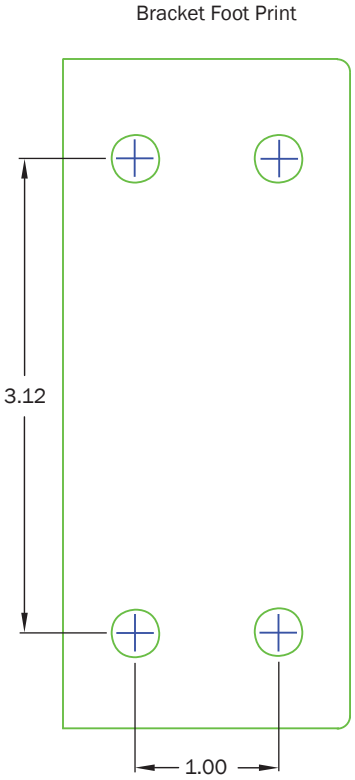

There are many types of clutch pumps in the industry and no two are alike; there is always a mounting or installation issue problem when trying to replace a clutch pump within different manufacturers. Permco's new clutch pump mounting bracket allows for replacing a Muncie H/K or H series type clutch pump without making installation changes. This new type bracket mounts to a standard Permco 124 Series Clutch Pump with a SAE-A-2 Bolt pump mounting flange converting the clutch pump to the Muncie style mounting configuration allowing mounting to the existing clutch pump engine mounting hardware without modifications. The bracket part number is 931-01590; consult factory for additional information.

SEAL KITS

Permco has vacuum packed seal kits available for all series pumps and motors. The seal kits may be ordered using the following part numbers.

NOTE: When selling seal kits for multiple units, a standard single kit is needed and one multiple kit for each additional set of gears. For instance, a triple P7500 would require one (1) P7500-S and two (2) P7500-T kits. These consist only of 'seals', no hardware is included. Viton and high performance motor kits are available upon request.

PART NUMBER	DESCRIPTION
P124-S	P124 Single Pump Seal Kit
P124-T	P124 Multiple Pump Seal Kit
M124-S	M124 Single Motor Seal Kit
P197-S	P197 Single Pump Seal Kit (Integral)
P197-T	P197 Multiple Pump Seal Kit
M197-S	M197 Single Motor Seal Kit
P257-S	P257 Single Pump Seal Kit (Integral & Continental)
P257-T	P257 Multiple Pump Seal Kit
M257-S	M257 Single Motor Seal Kit (Integral & Continental)
P360-S	P360 Single Pump Seal Kit
P360-T	P360 Multiple Pump Seal Kit
P1500-S	P1500 Single Pump Seal Kit
P1500-T	P1500 Multiple Pump Seal Kit
M1500-S	M1500 Single Motor Seal Kit
P2100-S	P2100 Single Pump Seal Kit (Integral)
P2100-S-C	P2100 Single Pump Seal Kit (Continental)
M2100-S	M2100 Single Motor Seal Kit (Integral)
M2100-S-C	M2100 Single Motor Seal Kit (Continental)
P2500-S1	P2500 Single Pump Seal Kit - Type I
P2500-T1	P2500 Multiple Pump Seal Kit - Type I
M2500-S1	M2500 Single Motor Seal Kit - Type I
M2500-S3	M2500 Single Motor Seal Kit – Type III w/excluder
P3000-S	P3000/P3100 Single Pump Seal Kit (Integral)
P3000-S-C	P3000/P3100 Single Pump Seal Kit (Continental)
P3000-T	P3000/P3100 Multiple Pump Seal Kit
M3000-S	M3000/M3100/PEK Single Motor Seal Kit (Integral)
M3000-S-C	M3000/M3100 Single Motor Seal Kit (Continental)
M3000-S-EX	M3000/M3100 Single Motor Seal Kit (Integral) w/excluder
M3000-SPL	M3000/M3100 Special Motor Seal Kit
M3000-STANLEY	M3000/M3100 Stanley Single Motor Seal Kit

SEAL KITS (CONT.)

PART NUMBER	DESCRIPTION
P3700-S1	P3700 Single Pump Seal Kit - Type I
P3700-T1	P3700 Multiple Pump Seal Kit - Type I
M3700-S1	M3700 Single Motor Seal Kit - Type I
P5000-S	P5000/P5100 Single Pump Seal Kit (Integral & Continental)
P5000-T	P5000/P5100 Multiple Pump Seal Kit
P5000-DV-I	P5000/P5100 Single Dry Valve Pump Seal Kit
M5000-S	M5000/M5100/PEL Single Motor Seal Kit (Integral & Continental)
M5000-S-NPK	M5000/M5100 Single Motor (NPK) Seal Kit
P5151-S	P5151 Single Pump Seal Kit
M5151-S	M5151 Single Motor Seal Kit
P7500-S	P7500/P7600 Single Pump Seal Kit (Integral & Continental)
P7500-T	P7500/P7600 Multiple Pump Seal Kit
P7500-DV-I	P7500/P7600 Single Dry Valve Pump Seal Kit (Integral)
P7500-DV-C	P7500/P7600 Single Dry Valve Pump Seal Kit (Continental)
M7500-S	M7500/M7600 Single Motor Seal Kit (Integral & Continental)
DM1-DMS	Dump Pump, Direct Mount Seal Kit (DMD-20 & DMD-25)
DM1-S	Dump Pump, Remote Mount Seal Kit (DM-512 & DM-640)
DM-400-SR	DM400, Remote Mount Seal Kit (DMR-300 & DMR-400)
DM-400-SD	DM400, Direct Mount Seal Kit (DMD-300 & DMD-400)
CH512-SK	CH Series Pump Seal Kit (CH384-15,512-20, & 640-25)
P-1991-K	Seal Tool Kit (4 Different Size Sleeves for Motor Seals) Q-1956-1 (2500) Q-1956-2 (3700) Q-1956-3 (5000/5100) Q-1956-4 (3000/3100) Q-1956-5 (124)

124 SERIES SEAL KITS

SEAL KIT PART #	COMPONENT PT #	QTY	DESCRIPTION
P124-S	226-01121	1	PUMP SHAFT SEAL
	TA-2995-152	2	HOUSING GASKET SEAL
	947-01106	2	THRUST PLATE BACKUP
	947-01107	2	THRUST PLATE SEAL
P124-T	TA-2995-152	2	HOUSING GASKET SEALS
	947-01106	2	THRUST PLATE BACKUP
	947-01107	2	THRUST PLATE SEAL
M124-S	249-01192	1	MOTOR SHAFT SEAL
	TA-2995-153	2	HOUSING GASKET SEAL
	947-01139	2	THRUST PLATE BACKUP
	947-01140	4	THRUST PLATE SIDE SEAL
	947-01141	4	THRUST PLATE END SEAL

197 SERIES SEAL KITS

P197-S	W62-26-18	1	PUMP SHAFT SEAL
	TA-2995-242	2	HOUSING GASKET SEAL
	947-00372-WSR	2	THRUST PLATE SEAL
	947-00374-WBR	2	THRUST PLATE BACKUP
P197-T	TA-2995-242	2	HOUSING GASKET SEAL
	947-00372-WSR	2	THRUST PLATE SEAL
	947-00374-WBR	2	THRUST PLATE BACKUP
M197-S	W62-49-11	1	MOTOR SHAFT SEAL
	TA-2995-241	2	HOUSING GASKET SEAL
	280-1770-931	4	THRUST PLATE SIDE SEAL
	280-1770-930	4	THRUST PLATE END SEAL
	280-1770-929	2	THRUST PLATE BACKUP SEAL

257 SERIES SEAL KITS

P257-S	W62-26-17	1	PUMP SHAFT SEAL
	TA-2995-246	2	HOUSING GASKET SEAL
	947-00812	2	THRUST PLATE SEAL
	947-00813	2	THRUST PLATE BACKUP
P257-T	TA-2995-246	2	HOUSING GASKET SEAL
	947-00812	2	THRUST PLATE SEAL
	947-00813	2	THRUST PLATE BACKUP
M257-S	W62-49-8	1	MOTOR SHAFT SEAL
	TA-2995-246	2	HOUSING GASKET SEAL
	280-1774-073	4	THRUST PLATE SIDE SEAL
	280-1774-074	4	THRUST PLATE END SEAL
	280-1774-075	2	THRUST PLATE BACKUP

360 SERIES SEAL KITS

P360-S	W62-26-10	1	PUMP SHAFT SEAL
	TA-2995-250	2	HOUSING GASKET SEAL
	947-01378	2	THRUST PLATE SEAL
	947-01379	2	THRUST PLATE BACKUP
P360-T	TA-2995-250	2	HOUSING GASKET SEAL
	947-01378	2	THRUST PLATE SEAL
	947-01379	2	THRUST PLATE BACKUP

1500 SERIES SEAL KITS

SEAL KIT PART #	COMPONENT PT #	QTY	DESCRIPTION
P1500-S	W62-26-6	1	PUMP SHAFT SEAL
	Q-2995-7	1	O'RING
	TA-2995-239	2	HOUSING GASKET SEAL
	J-2915-22	1	THRUST PLATE POCKET SEAL STRIP
	J-2909-16	2	BACKUP
P1500-T	Q-2995-7	1	O'RING
	TA-2995-239	2	HOUSING GASKET SEAL
	J-2915-22	1	THRUST PLATE POCKET SEAL STRIP
	J-2909-16	2	BACKUP
M1500-S	K-2995-121	1	O'RING
	Q-2995-7	2	O'RING
	TA-2995-239	2	HOUSING GASKET SEAL
	J-2915-22	1	THRUST PLATE POCKET SEAL STRIP
	J-2909-16	3	BACKUP

2100 SERIES SEAL KITS

P2100-S	W62-26-16	1	PUMP SHAFT SEAL
	K-2995-240	2	HOUSING GASKET SEALS
	AZ-2915-2	1	THRUST PLATE POCKET SEAL STRIP
P2100-S-C	W62-26-18	1	PUMP SHAFT SEAL
	K-2995-240	2	HOUSING GASKET SEALS
	AZ-2915-2	1	THRUST PLATE POCKET SEAL STRIP
M2100-S	W62-49-9	1	MOTOR SHAFT SEAL
	K-2995-240	2	HOUSING GASKET SEALS
	AZ-2915-2	1	THRUST PLATE POCKET SEAL STRIP
M2100-S-C	W62-49-11	1	MOTOR SHAFT SEAL
	K-2995-240	2	HOUSING GASKET SEALS
	AZ-2915-2	1	THRUST PLATE POCKET SEAL STRIP

2500 SERIES SEAL KITS

P2500-S1	W62-26-13	1	PUMP SHAFT SEAL
	TA-2995-244	2	HOUSING GASKET SEAL
	K-2995-26	1	O'RING
	J-2915-22	1	THRUST PLATE SEAL STRIP
P2500-T1	TA-2995-244	2	HOUSING GASKET SEAL
	J-2915-22	1	THRUST PLATE SEAL STRIP
M2500-S1	*W62-49-3	1	MOTOR SHAFT SEAL
	TA-2995-244	2	HOUSING GASKET SEAL
	K-2995-26	1	O'RING
	J-2915-22	1	THRUST PLATE SEAL STRIP

* **NOTE**: TYPE III USE W62-49-1 MOTOR SHAFT SEAL

M2500-S3	W62-491	1	MOTOR SHAFT SEAL
	TA-2995-244	2	HOUSING GASKET SEAL
	K-2995-47	1	O'RING
	J-2915-22	1	THRUST PLATE SEAL STRIP
	280-1774-935	1	EXCLUDER SEAL

3000/3100/PEK SERIES SEAL KITS

SEAL KIT PART #	COMPONENT PT #	QTY	DESCRIPTION
P3000-S	W62-26-16	1	PUMP SHAFT SEAL
	TA-2995-242	2	HOUSING GASKET SEAL
	AZ-2915-2	1	THRUST PLATE SEAL STRIP
P3000-S-C	W62-26-18	1	PUMP SHAFT SEAL
	TA-2995-242	2	HOUSING GASKET SEAL
	AZ-2915-2	1	THRUST PLATE SEAL STRIP
P3000-T	TA-2995-242	2	HOUSING GASKET SEAL
	AZ-2915-2	1	THRUST PLATE SEAL STRIP
M3000-S	W62-49-9	1	MOTOR SHAFT SEAL
	TA-2995-242	2	HOUSING GASKET SEAL
	AZ-2915-2	1	THRUST PLATE SEAL STRIP
M3000-S-C	W62-49-11	1	MOTOR SHAFT SEAL
	TA-2995-242	2	HOUSING GASKET SEAL
	AZ-2915-2	1	THRUST PLATE SEAL STRIP
M3000-SPL	W62-49-9	1	MOTOR SHAFT SEAL
	TA-2995-242	2	HOUSING GASKET SEAL
	558-00498-SR	1	SEAL RETAINER
	AZ-2915-2	1	THRUST PLATE SEAL STRIP
M3000-STANLEY	961-01166	1	BRASS RETAINER
	TA-2995-242	2	HOUSING GASKET SEAL
	K-2995-128	1	O'RING
	Q-2995-8	1	O'RING
	J-2909-16		BACKUP
M3000-S-EX	W62-49-9	1	MOTOR SHAFT SEAL
	TA-2995-242	2	HOUSING GASKET SEAL
	AZ-2915-2	1	THRUST PLATE SEAL STRIP
	226-00538	1	EXCLUDER SEAL

3700 SERIES SEAL KITS

P3700-S1	W62-26-10	1	PUMP SHAFT SEAL
	TA-2995-249	2	HOUSING GASKET SEAL
	K-2995-33	1	O'RING
	J-2915-19	1	THRUST PLATE SEAL STRIP
P3700-T1	TA-2995-249	2	HOUSING GASKET SEAL
	J-2915-19	1	THRUST PLATE SEAL STRIP
M3700-S1	W62-49-1	1	MOTOR SHAFT SEAL
	TA-2995-249	2	HOUSING GASKET SEAL
	K-2995-33	1	O'RING
	J-2915-19	1	THRUST PLATE SEAL STRIP

5000/5100/PEL SERIES SEAL KITS

SEAL KIT PART #	COMPONENT PT #	QTY	DESCRIPTION
P5000-S	W62-26-17	1	PUMP SHAFT SEAL
	TA-2995-244	2	HOUSING GASKET SEAL
	AZ-2915-2	1	THRUST PLATE SEAL STRIP
P5000-T	TA-2995-244	2	HOUSING GASKET SEAL
	AZ-2915-2	1	THRUST PLATE SEAL STRIP
P5000-DV-I	W62-49-8	1	MOTOR SHAFT SEAL
	W62-26-17	1	PUMP SHAFT SEAL
	TA-2995-244	2	HOUSING GASKET SEAL
	K-2995-47	1	O'RING
M5000-S	W62-49-8	1	MOTOR SHAFT SEAL
	TA-2995-244	2	HOUSING GASKET SEAL
	AZ-2915-2	1	THRUST PLATE SEAL STRIP
M5000-S-NPK	W62-49-8	1	MOTOR SHAFT SEAL
	TA-2995-244	2	HOUSING GASKET SEAL
	K-2995-164	1	O'RING
	AZ-2915-2	1	THRUST PLATE SEAL STRIP

5151 SERIES SEAL KITS

P5151-S	W62-26-17	1	PUMP SHAFT SEAL
	TA-2995-244	1	HOUSING GASKET SEAL
	TA-2995-250	1	HOUSING GASKET SEAL
M5151-S	W62-49-8	1	MOTOR SHAFT SEAL
	TA-2995-244	1	HOUSING GASKET SEAL
	TA-2995-250	1	HOUSING GASKET SEAL

7500/7600 SERIES SEAL KITS

SEAL KIT PART #	COMPONENT PT #	QTY	DESCRIPTION
P7500-S	W62-26-10	1	PUMP SHAFT SEAL
	TA-2995-252	2	HOUSING GASKET SEAL
	K-2995-164	2	O'RING
	AZ-2915-6	1	THRUST PLATE SEAL STRIP
P7500-T	TA-2995-252	2	HOUSING GASKET SEAL
	AZ-2915-6	1	THRUST PLATE SEAL STRIP
P7500-DV-I	W62-49-1	1	MOTOR SHAFT SEAL
	W62-26-10	1	PUMP SHAFT SEAL
	TA-2995-252	2	HOUSING GASKET SEAL
	K-2995-164	2	O'RING
P7500-DV-C	W62-26-10	2	PUMP SHAFT SEAL
	TA-2995-252	2	HOUSING GASKET SEAL
	K-2995-164	2	O'RING
M7500-S	W62-49-1	1	MOTOR SHAFT SEAL
	TA-2995-252	2	HOUSING GASKET SEAL
	K-2995-164	1	O'RING
	AZ-2915-6	1	THRUST PLATE SEAL STRIP

DM512-640 & DMD-20-25 SERIES SEAL KITS

SEAL KIT PART #	COMPONENT PT #	QTY	DESCRIPTION
DM1-S	W62-49-3	2	MOTOR SHAFT SEAL
	TA-2995-245	2	HOUSING GASKET SEAL
	K-2995-9	2	O'RING
	J-2915-22	1	THRUST PLATE SEAL STRIP
DM1-DMS	W62-49-8	1	MOTOR SHAFT SEAL
	TA-2995-245	2	HOUSING GASKET SEAL
	K-2995-9	2	O'RING
	J-2915-22	1	THRUST PLATE SEAL STRIP

DMR300-400 & DMD-300-400 SERIES SEAL KITS

DM400-SR	W62-49-400	2	MOTOR SHAFT SEAL
	K-2995-240	2	HOUSING GASKET SEAL
	Q-2995-7	2	O'RING
DM400-SD	W62-49-400	1	MOTOR SHAFT SEAL
	K-2995-240	2	HOUSING GASKET SEAL
	Q-2995-7	2	O'RING

CH384-512 & 640 SERIES SEAL KITS

CH512-SK	W62-26-20	2	PUMP SHAFT SEAL
	TA-2995-244	2	HOUSING GASKET SEAL

SEAL INSERTION TOOL KITS

P-1991-K	Q-1956-1	1	2500/DM-512/DM-640 SEAL INSERTION TUBE
	Q-1956-2	1	3700/7500/7600 SEAL INSERTION TUBE
	Q-1956-3	1	5000/5100/5151/PEL/DMD-20/DMD-25 SEAL INSERTION TUBE
	Q-1956-4	1	2100/3000/3100/PEK/DMR400/DMD400 SEAL INSERTION TUBE
	Q-1956-5	1	124 SEAL INSERTION TUBE

STANDARD SEALS

SERIES	SHAFT SEAL	GASKET SEAL	SEAL RETAINER O-RING	SHAFT O-RING	SHAFT BACKUP RING	THRUST PLATE BACKUP	THRUST PLATE SEAL PUMP	THRUST PLATE SIDE SEAL MOTOR	THRUST PLATE END SEAL MOTOR
P124	226-01121	TA-2995-152	N/A	N/A	N/A	947-01106	947-01107	N/A	N/A
M124	249-01192	TA-2995-153	N/A	N/A	N/A	947-01139	N/A	947-01140	947-01141
P197	W62-26-18	TA-2995-242	N/A	N/A	N/A	947-00374-WBR	947-00372-WSR	N/A	N/A
P197 CONTINENTAL	W62-26-18	TA-2995-242	K-2995-109	N/A	N/A	947-00374-WBR	947-00372-WSR	N/A	N/A
M197	W62-49-11	TA-2995-241	N/A	N/A	N/A	280-1770-929	N/A	280-1770-931	280-1770-930
M197 CONTINENTAL	W62-49-11	TA-2995-241	N/A	N/A	N/A	280-1770-929	N/A	280-1770-931	280-1770-930
P257	W62-26-17	TA-2995-246	K-2995-164	N/A	N/A	947-00813	947-00812	N/A	N/A
P257 CONTINENTAL	W62-26-17	TA-2995-246	K-2995-164	N/A	N/A	947-00813	947-00812	N/A	N/A
M257	W62-49-8	TA-2995-246	K-2995-164	N/A	N/A	280-1774-075	N/A	280-1774-073	280-1774-074
M257 CONTINENTAL	W62-49-8	TA-2995-246	K-2995-164	N/A	N/A	280-1774-075	N/A	280-1774-073	280-1774-074
P360	W62-26-10	TA-2995-250	N/A	N/A	N/A	947-01379	947-01378	N/A	N/A
P1500	W62-26-6	TA-2995-239	N/A	Q-2995-7	J-2909-16	N/A	N/A	N/A	N/A
M1500	N/A	TA-2995-239	K-2995-121	Q-2995-7	J-2909-16	N/A	N/A	N/A	N/A
P2100	W62-26-16	K-2995-240	K-2995-109	N/A	N/A	N/A	N/A	N/A	N/A
P2100 CONTINENTAL	W62-26-18	K-2995-240	K-2995-109	N/A	N/A	N/A	N/A	N/A	N/A
M2100	W62-49-9	K-2995-240	K-2995-109	N/A	N/A	N/A	N/A	N/A	N/A
M2100 CONTINENTAL	W62-49-11	K-2995-240	K-2995-109	N/A	N/A	N/A	N/A	N/A	N/A
P2500 TYPE I	W62-26-13	TA-2995-244	K-2995-26	N/A	N/A	N/A	N/A	N/A	N/A
M2500 TYPE I	W62-49-3	TA-2995-244	K-2995-26	N/A	N/A	N/A	N/A	N/A	N/A
M2500 TYPE III	W62-49-11	TA-2995-244	K-2995-26	N/A	N/A	N/A	N/A	N/A	N/A
P3000/3100	W62-26-16	TA-2995-242	K-2995-109	N/A	N/A	N/A	N/A	N/A	N/A
P3000/3100 CONTINENTAL	W62-26-18	TA-2995-242	K-2995-109	N/A	N/A	N/A	N/A	N/A	N/A
M3000/3100	W62-49-9	TA-2995-242	K-2995-109	N/A	N/A	N/A	N/A	N/A	N/A
M3000/3100 CONTINENTAL	W62-49-11	TA-2995-242	K-2995-109	N/A	N/A	N/A	N/A	N/A	N/A
P3700 TYPE I	W62-26-10	TA-2995-249	K-2995-33	N/A	N/A	N/A	N/A	N/A	N/A
M3700 TYPE I	W62-49-1	TA-2995-249	K-2995-33	N/A	N/A	N/A	N/A	N/A	N/A
P5000/5100	W62-26-17	TA-2995-244	K-2995-164	N/A	N/A	N/A	N/A	N/A	N/A
P5000/5100 CONTINENTAL	W62-26-17	TA-2995-244	K-2995-164	N/A	N/A	N/A	N/A	N/A	N/A
M5000/5100	W62-49-8	TA-2995-244	K-2995-164	N/A	N/A	N/A	N/A	N/A	N/A
M5000/5100 CONTINENTAL	W62-49-8	TA-2995-244	K-2995-164	N/A	N/A	N/A	N/A	N/A	N/A
P5151	W62-26-17	TA-2995-244 (1) TA-2995-250 (1)	K-2995-164	N/A	N/A	N/A	N/A	N/A	N/A
P5151 CONTINENTAL	W62-26-17	TA-2995-244 (1) TA-2995-250 (1)	K-2995-164	N/A	N/A	N/A	N/A	N/A	N/A
M5151	W62-49-8	TA-2995-244 (1) TA-2995-250 (1)	K-2995-164	N/A	N/A	N/A	N/A	N/A	N/A
M5151 CONTINENTAL	W62-49-8	TA-2995-244 (1) TA-2995-250 (1)	K-2995-164	N/A	N/A	N/A	N/A	N/A	N/A
P7500/7600	W62-26-10	TA-2995-252	K-2995-164	N/A	N/A	N/A	N/A	N/A	N/A
P7500/7600 CONTINENTAL	W62-26-10	TA-2995-252	K-2995-164	N/A	N/A	N/A	N/A	N/A	N/A
M7500/7600	W62-49-1	TA-2995-252	K-2995-164	N/A	N/A	N/A	N/A	N/A	N/A
M7500/7600 CONTINENTAL	W62-49-1	TA-2995-252	K-2995-164	N/A	N/A	N/A	N/A	N/A	N/A

N/A = NOT APPLICABLE

VITON SEALS

SERIES	SHAFT SEAL	GASKET SEAL	SEAL RETAINER O-RING	SHAFT O-RING	SHAFT BACKUP RING	THRUST PLATE BACKUP	THRUST PLATE SEAL PUMP	THRUST PLATE SIDE SEAL MOTOR	THRUST PLATE END SEAL MOTOR
P124	226-01121-V	ZA-2995-152	N/A	N/A	N/A	947-01106	947-01107-V	N/A	N/A
M124	249-01192	N/AV	N/A	N/A	N/A	N/AV	N/A	N/AV	N/AV
P197	W62-34-18	ZA-2995-242	N/A	N/A	N/A	947-00374-WBR	947-00372-VSR	N/A	N/A
P197 CONTINENTAL	W62-34-18	ZA-2995-242	N/A	N/A	N/A	947-00374-WBR	947-00372-VSR	N/A	N/A
M197	W62-49-11	N/AV	N/A	N/A	N/A	N/AV	N/A	N/AV	N/AV
M197 CONTINENTAL	W62-49-11	N/AV	N/A	N/A	N/A	N/AV	N/A	N/AV	N/AV
P257	W62-34-17	ZA-2995-246	N/A	N/A	N/A	947-00813	947-00812V	N/A	N/A
P257 CONTINENTAL	W62-34-17	ZA-2995-246	N/A	N/A	N/A	947-00813	947-00812V	N/A	N/A
M257	W62-49-8	ZA-2995-246	N/A	N/A	N/A	N/AV	N/A	N/AV	N/AV
M257 CONTINENTAL	W62-49-8	ZA-2995-246	N/A	N/A	N/A	N/AV	N/A	N/AV	N/AV
P360	W62-34-10	391-2881-050	N/A	N/A	N/A	N/AV	N/AV	N/A	N/A
P1500	W62-49-6	ZA-2995-239	ZA-2995-212	ZA-2995-26	J-2909-16	N/A	N/A	N/A	N/A
M1500	N/A	ZA-2995-239	ZA-2995-212	ZA-2995-26	J-2909-16	N/A	N/A	N/A	N/A
P2100	W62-34-16	ZA-2995-240	N/A	N/A	N/A	N/A	N/A	N/A	N/A
P2100 CONTINENTAL	W62-34-18	ZA-2995-240	N/A	N/A	N/A	N/A	N/A	N/A	N/A
M2100	W62-49-9	ZA-2995-240	N/A	N/A	N/A	N/A	N/A	N/A	N/A
M2100 CONTINENTAL	W62-49-11	ZA-2995-240	N/A	N/A	N/A	N/A	N/A	N/A	N/A
P2500 TYPE I	W62-49-30	ZA-2995-244	ZA-2995-228	N/A	N/A	N/A	N/A	N/A	N/A
M2500 TYPE I	W62-49-30	ZA-2995-244	ZA-2995-228	N/A	N/A	N/A	N/A	N/A	N/A
M2500 TYPE III	W62-49-11	ZA-2995-244	ZA-2995-228	N/A	N/A	N/A	N/A	N/A	N/A
P3000/3100	W62-34-16	ZA-2995-242	N/A	N/A	N/A	N/A	N/A	N/A	N/A
P3000/3100 CONTINENTAL	W62-34-18	ZA-2995-242	N/A	N/A	N/A	N/A	N/A	N/A	N/A
M3000/3100	W62-49-9	ZA-2995-242	N/A	N/A	N/A	N/A	N/A	N/A	N/A
M3000/3100 CONTINENTAL	W62-49-11	ZA-2995-242	N/A	N/A	N/A	N/A	N/A	N/A	N/A
P3700 TYPE I	W62-34-10	ZA-2995-249	ZA-2995-232	N/A	N/A	N/A	N/A	N/A	N/A
M3700 TYPE I	W62-49-1	ZA-2995-249	ZA-2995-232	N/A	N/A	N/A	N/A	N/A	N/A
P5000/5100	W62-34-17	ZA-2995-244	N/A	N/A	N/A	N/A	N/A	N/A	N/A
P5000/5100 CONTINENTAL	W62-34-17	ZA-2995-244	N/A	N/A	N/A	N/A	N/A	N/A	N/A
M5000/5100	W62-49-8	ZA-2995-244	N/A	N/A	N/A	N/A	N/A	N/A	N/A
M5000/5100 CONTINENTAL	W62-49-8	ZA-2995-244	N/A	N/A	N/A	N/A	N/A	N/A	N/A
P5151	W62-34-17	ZA-2995-244 (1) N/AV (1)	N/A	N/A	N/A	N/A	N/A	N/A	N/A
P5151 CONTINENTAL	W62-34-17	ZA-2995-244 (1) N/AV (1)	N/A	N/A	N/A	N/A	N/A	N/A	N/A
M5151	W62-49-8	ZA-2995-244 (1) N/AV (1)	N/A	N/A	N/A	N/A	N/A	N/A	N/A
M5151 CONTINENTAL	W62-48-8	ZA-2995-244 (1) N/AV (1)	N/A	N/A	N/A	N/A	N/A	N/A	N/A
P7500/7600	W62-49-10	ZA-2995-252	ZA-2995-146	N/A	N/A	N/A	N/A	N/A	N/A
P7500/7600 CONTINENTAL	W62-49-10	ZA-2995-252	ZA-2995-146	N/A	N/A	N/A	N/A	N/A	N/A
M7500/7600	W62-49-1	ZA-2995-252	ZA-2995-146	N/A	N/A	N/A	N/A	N/A	N/A
M7500/7600 CONTINENTAL	W62-49-1	ZA-2995-252	ZA-2995-146	N/A	N/A	N/A	N/A	N/A	N/A

N/A = NOT APPLICABLE N/AV = NOT AVAILABLE CONSULT FACTORY

SHAFT SEAL APPLICATION CROSS REFERENCE

	Shaft Seal Manufacture Recommendations					
Permco	Housing Bore	Seal	Shaft	Seal	Application	Used
Part Number	ID	OD	OD	Width		
226-00538	2.047 ±0.001	2.051 ±0.002	1.000 ±0.003	0.250	EXCLUDER	Excluder 2100/3000/25000
226-01015	2.000 ±0.001	2.004 ±0.002	1.250 ±0.003	0.250	PUMP	*Commercial type shafts
226-01121-V	1.496 ±0.001	1.500 ±0.002	0.9425-0.9430	0.250 ±0.015	PUMP	PE124 Viton
226-01527	1.497 ±0.001	1.501 ±0.002	0.875 ±0.003	0.313	MOTOR	Zamboni
249-01192	1.496 ±0.001	1.500 ±0.002	0.9425-0.9430	0.250 ±0.015	MOTOR	M124 obsolete
249-01536	1.999±0.001	2.001-2.006	1.2895-1.2900	0.285±0.015	MOTOR	257/5000 Severe Duty
249-01555	1.496 ±0.001	1.498-1.503	0.9425-0.9430	0.312 ±0.016	MOTOR	M124 double lip
249-01583	2.125±0.001	2.127-2.132	1.3770-1.3775	0.285±0.015	MOTOR	360, 7500 Severe Duty
280-1774-935	1.834 ±0.001	1.838 ±0.002	1.375 ±0.003	0.188	EXCLUDER	Excluder 2500 type 3
W62-26-75	3.150 + 0.0015	* 3.154 ±0.002	1.378 ±0.002	0.276	EXCLUDER	Excluder 7500
W62-34-10	Similar Dimensions As W62-26-10				PUMP	360/7500 Viton
W62-34-16	Similar Dimensions As W62-26-16				PUMP	3000/2100 Viton Continental
W62-34-17	Similar Dimensions As W62-26-17				PUMP	257/5000 Viton
W62-34-18	Similar Dimensions As W62-26-18				PUMP	Viton for 1" dia shaft x 1.686
280-1772-186	2.000 ±0.001	2.004 ±0.002	1.250 ±0.003		MOTOR	*Commercial type shafts

*212-0499-502 CODE 62 257
*202-0499-502 CODE 62 5000
*212-0999-001 CODE 2 257

* - Calculated Value Reference Only

SHAFT SEAL APPLICATION CROSS REFERENCE

PART NO.	DESCRIPTION
Q-1956-1	2500 SHAFT SEAL INSERTION SLEEVE
Q-1956-2	3700 SHAFT SEAL INSERTION SLEEVE
Q-1956-3	5000 SHAFT SEAL INSERTION SLEEVE
Q-1956-4	3000 SHAFT SEAL INSERTION SLEEVE
Q-1956-5	124 SHAFT SEAL INSERTION SLEEVE

REV.	BY	DATE	ECN NO.	DESCRIPTION
A	JBA	09-06-05	21388	REVISED AND REDRAWN

DO NOT SCALE DRAWING

THIS PRINT AND THE DESIGN AND DETAIL SHOWN HEREON ARE THE PROPERTY AND INVENTION OF PERMCO, INC. THIS PRINT IS FURNISHED WITH THE UNDERSTANDING THAT IT IS NOT TO BE TRANSFERRED, TRACED, REPRODUCED, STORED IN A RETRIEVAL SYSTEM OR TRANSMITTED, IN ANY FORM OR BY ANY MEANS, ELECTRONIC, MECHANICAL, PHOTOCOPYING, RECORDING OR OTHERWISE WITHOUT PRIOR WRITTEN PERMISSION OF PERMCO, INC. AND IS RETURNABLE UPON DEMAND. ALL RIGHTS OF DESIGN AND INVENTION ARE RESERVED BY PERMCO, INC.

MATERIAL //

HEAT TREAT //

MAKE FROM //

UNLESS OTHERWISE SPECIFIED

1. DIMENSIONS ARE IN INCHES.
2. TOLERANCE ON DIMENSIONS
   1-PLACE .X = ± .06
   2-PLACE .XX = ± .03
   3-PLACE .XXX = ±.010
3. TOLERANCE ON ANGLES ± 1/2°
4. ALL DIA's ON SAME C/L TO RUNOUT NO MORE THAN .005 TIR
5. REMOVE ALL BURRS AND BREAK ALL SHARP EDGES .005/.015. 125 RMS FINISH ON ALL MACHINED SURFACES.
6. MACHINED FILLET RADII .005/.015.

SCALE 1 : 1 | DRAWING SIZE A

NAME

SHAFT SEAL INSERTION SLEEVE KIT

SUPERSEDES P-1956-K | SUPERSEDED BY

DRAWN BY DAE | CHECKED BY | APPROVED BY

DATE 10-22-90 | DATE | DATE

PERMCO®

1500 Frost Road
Streetsboro, Ohio 44241

DRAWING NO. P-1991-K

SHEET NO. 1 of 1 | REVISION A

FASTENERS

124 SINGLE (1/2")

GEAR SIZE	CAP SCREW #	QTY.
1/2"	W1-88	4
3/4"	W1-11	4
1"	W1-66	4
1-1/4"	W1-12	4
1-1/2"	W1-69	4
1-3/4"	W1-83	4
2"	W1-60	4

1500 SINGLE (1/2")

GEAR SIZE	CAP SCREW #	QTY.
1/2"	W1-11	4
3/4"	W1-12	4
1"	W1-12	4
1-1/4"	W1-83	4
1-1/2"	W1-83	4
1-3/4"	W1-34	4
2"	W1-34	4

360 SINGLE (5/8")

GEAR SIZE	CAP SCREW #	QTY.
1/2″	W1-58	4
3/4"	W1-58	4
1"	W1-14	4
1-1/4"	W1-14	4
1-1/2"	W1-78	4
1-3/4"	W1-78	4
2"	W1-65	4
2-1/4"	W1-65	4
2-1/2"	W1-89	4

3700 SINGLE (1/2")

GEAR SIZE	CAP SCREW #	QTY.
3/4"	W1-68	8
1"	W1-68	8
1-1/4"	W1-090	8
1-1/2"	W1-090	8
1-3/4"	W1-15	8
2"	W1-099	8
2-1/4"	W1-099	8
2-1/2"	W1-76	8
2-3/4"	W1-76	8
3"	W1-75	8

2100 SINGLE (9/16")

GEAR SIZE	CAP SCREW #	QTY.
1/2"	900-01020-400	4
3/4"	900-01020-400	4
1"	W1-300	4
1-1/4"	W1-300	4
1-1/2"	W1-400	4
1-3/4"	W1-400	4
2"	900-01020-550	4

197 SINGLE (5/8")

GEAR SIZE	CAP SCREW #	QTY.
1/2"	W1-096	4
3/4"	W1-13	4
1"	W1-13	4
1-1/4"	W1-58	4
1-1/2"	W1-58	4
1-3/4"	W1-14	4
2"	W1-14	4

257 SINGLE (5/8")

GEAR SIZE	CAP SCREW #	QTY.
1/2"	W1-096	4
3/4"	W1-13	4
1"	W1-13	4
1-1/4"	W1-58	4
1-1/2"	W1-58	4
1-3/4"	W1-14	4
2"	W1-14	4
2-1/4"	W1-78	4
2-1/2"	W1-78	4

2500 / 3000 / 3100 / 5000 / 5100 SINGLE (5/8")

GEAR SIZE	CAP SCREW #	QTY.
1/2"	W1-13	4
3/4"	W1-13	4
1"	W1-58	4
1-1/4"	W1-58	4
1-1/2"	W1-14	4
1-3/4"	W1-14	4
2"	W1-78	4
2-1/4"	W1-78	4
2-1/2"	W1-65	4

FASTENERS

5151 SINGLE (5/8")

GEAR SIZE	CAP SCREW #	QTY.
1-3/4"	W1-78	4
2"	W1-65	4
2-1/4"	W1-65	4
2-1/2"	W1-89	4

7500 / 7600 SINGLE (5/8")

GEAR SIZE	CAP SCREW #	QTY.
3/4"	W1-58	8
1"	W1-14	8
1-1/4"	W1-14	8
1-1/2"	W1-78	8
1-3/4"	W1-78	8
2"	W1-65	8
2-1/4"	W1-65	8
2-1/2"	W1-89	8
2-3/4"	W1-89	8
3"	W1-64	8

WASHERS FOR SINGLES

1/2" – W033-1
9/16" – W033-3
5/8" – W033-2

(4 per pump except 3700 or 7500 which take 8 per pump)

WASHERS AND HEX NUTS FOR TANDEMS:

WASHERS: 1/2" – W033-1
9/16" – W033-3
5/8" – W033-2

HEX NUT: 1/2" – W3-40
9/16" – 900-01022
5/8" – W3-65

(4 per pump except 3700 or 7500 which take 8 per pump)

STUD LENGTHS: (DUAL)

# PCS.	SERIES	FLUSH	EXTENDED
4	124	6.00	7.50
4	197	8.00	10.00
4	257	8.50	10.50
4	360	9.00	11.00
4	1500	6.50	8.00
4	2100	7.25	8.25
4	2500	7.62	9.12
4	3000	7.25	8.75
4	3100	7.25	8.75
8	3700	8.84	10.34
4	5000	7.62	9.12
4	5100	7.62	9.12
8	7500	8.56	10.06
8	7600	8.56	10.06

STUD LENGTHS: (TRIPLE)

# PCS.	SERIES	FLUSH	EXTENDED
4	124	9.00	10.50
4	197	12.00	14.00
4	257	13.00	15.00
4	360	13.50	15.50
4	1500	9.75	11.25
4	2100	10.50	11.50
4	2500	11.25	12.75
4	3000	10.50	12.00
4	3100	10.50	12.00
8	3700	12.84	14.34
4	5000	11.19	12.69
4	5100	11.19	12.69
8	7500	12.56	14.06
8	7600	12.56	14.06

STUD LENGTHS: (QUAD)

# PCS.	SERIES	FLUSH	EXTENDED
4	124	12.00	13.50
4	197	16.00	18.00
4	257	17.50	19.50
4	360	18.00	20.00
4	1500	13.00	15.00
4	2100	13.75	14.75
4	2500	14.88	16.88
4	3000	13.75	15.75
4	3100	13.75	15.75
8	3700	16.88	18.88
4	5000	14.88	16.88
4	5100	14.88	16.88
8	7500	16.56	18.56
8	7600	16.56	18.56

FASTENERS

ON EXTENDED CODES, ONLY 2 STUDS ARE EXTENDED.
THE REMAINING STUDS ARE FLUSH.

3700, 7500 AND 7600 SERIES TAKE 8 STUDS; ALL
OTHER SERIES TAKE 4 STUDS.

ADD FLUSH AND/OR EXTENDED LENGTH NUMBER TO
TOTAL GEAR WIDTH AND USE APPROPRIATE PART
NUMBER.

EXAMPLE: 7500 DUAL TANDEM WITH 2-1/2" GEAR AND
2" GEAR.
TAKE THE 8.56 + 2.5 + 2.0 = 13.06.
USE 14" STUD FOR FLUSH.
TAKE 10.06 + 2.50 + 2.0 + = 14.56.
USE 16" STUD FOR EXTENDED.

EXTENDED STUD THREAD PROTECTORS:

PART #	SIZE
SP-1000-6	1/2"
SP-1000-2	9/16"
SP-1000-7	5/8"

FASTENERS

THREADED STUDS: (1/2")

DESCRIPTION	PART NUMBER
1/2-13 X 10"	ZE-0391-10
1/2-13 X 12"	ZE-0391-12
1/2-13 X 14"	ZE-0391-14
1/2-13 X 16"	ZE-0391-16
1/2-13 X 18"	ZE-0391-18
1/2-13 X 20"	ZE-0391-20
1/2-13 X 24"	ZE-0391-24
1/2-13 X 28"	ZE-0391-28

THREADED STUDS: (9/16")

DESCRIPTION	PART NUMBER
9/16-12 X 10"	900-01020-1000
9/16-12 X 12.25"	900-01020-1225
9/16-12 X 17.50"	900-01020-1750

THREADED STUDS: (5/8")

DESCRIPTION	PART NUMBER
5/8-11 X 8"	ZD-0391-08
5/8-11 X 8.75"	ZD-0391-875
5/8-11 X 9"	ZD-0391-09
5/8-11 X 9.5"	ZD-0391-095
5/8-11 X 10"	ZD-0391-10
5/8-11 X 10.5"	ZD-0391-105
5/8-11 X 11.25"	ZD-0391-112
5/8-11 X 12"	ZD-0391-12
5/8-11 X 12.5"	ZD-0391-125
5/8-11 X 13.25"	ZD-0391-132
5/8-11 X 14"	ZD-0391-14
5/8-11 X 14.25"	ZD-0391-142
5/8-11 X 16"	ZD-0391-16
5/8-11 X 18"	ZD-0391-18
5/8-11 X 20"	ZD-0391-20
5/8-11 X 22"	ZD-0391-22
5/8-11 X 24"	ZD-0391-24
5/8-11 X 26"	ZD-0391-26
5/8-11 X 28"	ZD-0391-28
5/8-11 X 30"	ZD-0391-30
5/8-11 X 36"	ZD-0391-36
5/8-11 X 40"	ZD-0391-40

STUDS ARE GRADE 8 ROLLED THREAD

PLASTIC PLUGS:

NPT

DIAMETER	PART NUMBER
1/8"	#8
1/4"	#11
3/8"	#17
1/2"	#23
3/4"	#30
1"	#42
1-1/4"	#53
1-1/2"	#57
2"	#68
2-1/2"	#78

JIC

DIAMETER	PART NUMBER
1/2"	#23
5/8"	#27
3/4"	#35
7/8"	#42
1"	#44
1-1/4"	#53
1-1/2"	#57

SPLIT FLANGE

DIAMETER	PART NUMBER
1/2"	#12
3/4"	B-831-213
1"	B-831-214
1-1/4"	B-831-215
1-1/2"	B-831-216
2"	B-831-217
2-1/2"	B-831-218

SHAFT PROTECTORS:

PART #	SIZE	
SP-1000-1	.656	ID
SP-1000-2	.587	ID
SP-1000-3	1"	ID (SC & DC)
SP-1000-4	1-1/8"	ID
SP-1000-5	1-1/4"	ID (OC, MD, RC)
SP-1000-6	.500	ID
SP-1000-7	.625	ID
SP-1000-8	.875	ID

(For .750 use SP-1000-8)

STUD (TIE ROD) LENGTHS

SERIES	TOTAL GEAR WIDTH + FLUSH DUAL	TOTAL GEAR WIDTH + EXTENDED DUAL	TOTAL GEAR WIDTH + FLUSH TRIPLE	TOTAL GEAR WIDTH + EXTENDED TRIPLE	TOTAL GEAR WIDTH + FLUSH QUAD	TOTAL GEAR WIDTH + EXTENDED QUAD
124	6.00	7.50	9.00	10.50	12.00	13.50
197	8.00	10.00	12.00	14.00	16.00	18.00
257	8.50	10.50	13.00	15.00	17.50	19.50
360	9.00	1.00	13.50	15.50	18.00	20.00
1500	6.50	8.50	9.75	11.75	13.00	15.00
2100	7.25	8.25	10.50	11.50	13.75	14.75
2500	7.62	9.62	11.25	13.25	15.00	17.00
3000/3100	7.25	9.25	10.50	12.50	13.75	15.75
3700	9.00	11.00	13.00	15.00	17.00	19.00
5000/5100	7.62	9.62	11.25	13.25	15.00	17.00
5151	N/A	N/A	N/A	N/A	N/A	N/A
7500/7600	8.56	10.56	12.56	14.56	16.56	18.56

Use above dimensions plus total gear width for stud (tie rod) lengths.
Example: P7500 dual tandem unit with 2-1/2" gear section and 2" gear section
Take the 8.56 + 2.50 + 2.00 = 13.06. Use 14" stud.
4 studs required per unit except 3700 or 7500/7600 series which require 8 studs per unit.
On extended codes, only 2 studs are extended the rest are flush.

STUDS (TIE RODS) LENGTHS AVAILABLE IN 1/2"

PART #	SIZE
ZE-0391-10	1/2-13 X 10"
ZE-0391-12	1/2-13 X 12"
ZE-0391-14	1/2-13 X 14"
ZE-0391-16	1/2-13 X 16"
ZE-0391-20	1/2-13 X 20"
ZE-0391-24	1/2-13 X 24"
ZE-0391-28	1/2-13 X 28"

STUDS (TIE RODS) LENGTHS AVAILABLE IN 5/8"

PART #	SIZE
ZD-0391-08	5/8-11 X 8"
ZD-0391-875	5/8-11 X 8-3/4"
ZD-0391-09	5/8-11 X 9"
ZD-0391-095	5/8-11 X 9-1/2"
ZD-0391-10	5/8-11 X10"
ZD-0391-105	5/8-11 X 10-1/2"
ZD-0391-112	5/8-11 X 11-1/4"
ZD-0391-12	5/8-11 X 12"
ZD-0391-125	5/8-11 X 12-1/2"
ZD-0391-132	5/8-11 X 13-1/4"
ZD-0391-14	5/8-11 X 14"
ZD-0391-142	5/8-11 X 14-1/4"
ZD-0391-16	5/8-11 X 16"
ZD-0391-18	5/8-11 X 18"
ZD-0391-20	5/8-11 X 20"
ZD-0391-22	5/8-11 X 22"
ZD-0391-24	5/8-11 X 24"
ZD-0391-26	5/8-11 X 26"
ZD-0391-28	5/8-11 X 28"
ZD-0391-30	5/8-11 X 30"
ZD-0391-36	5/8-11 X 36"
ZD-0391-40	5/8-11 X 40"

STUDS (TIE RODS) LENGTHS AVAILABLE IN 9/16"

PART #	SIZE
900-01021-0725	9/16-12 X 7-1/4"
900-01021-1000	9/16-12 X 10"
900-01021-1225	9/16-12 X 12-1/4"
900-01021-1750	9/16-12 X 17-1/2"

WASHERS FOR SINGLES AND TANDEMS
(4 per unit except 3700 or 7500/7600 which take 8 per unit)

PART #	SIZE
W033-1	1/2"
W033-3	9/16"
W033-2	5/8"

HEX NUTS FOR TANDEMS
(4 per unit except 3700 or 7500/7600 which take 8 per unit)

PART #	SIZE
W3-40	1/2"
900-01022	9/16"
W3-65	5/8"

All Tie Rods are Grade 8 Rolled Thread
with 1-1/2" to 3" Threads Each End

Hydraulic/Pneumatic Products

1500 Frost Road - Post Office Box 2068 - Streetsboro, Ohio 44241-0869 - (330)626-2801 - Fax: (330)626-2805

To: All Permco Distributors ***February 23, 2007***

Subject: Fastener Torque Specifications For All Series

In efforts to provide better product information; listed below are model series, fastener size and torque specifications. Follow these recommendation when assembling units.

MODEL SERIES	FASTENER SIZE	TORQUE (FT/LB)
P/M124	1/2″	120
P/M424	1/2”	120
P/M197	5/8″	200
P/M257	5/8″	200
P360	5/8″	250
P460	5/8”	250
M360	3/4”	450
M460	3/4”	450
P/M1200	1/2″	90
P/M1500	1/2″	100
P/M2100	9/16″	160
P/M2500	5/8″	200
P/M3000	5/8″	200
P/M3100	5/8″	200
P/M3700	1/2″	120
P/M5000	5/8″	200
P/M5100	5/8″	200
P/M7500	5/8″	200
P/M7600	5/8″	200
DMD25	5/8″	200
DMD400	9/16″	160

All bolts used are SAE Grade 8 with 150,000 PSI minimum tensile strength. In some applications bolt torque is increased from 200 to 250 ft/lb; consult factory.

NFPA Solutions through motion technology

The Sensible Choice

RECOMMENDED SPEED AND FEEDS FOR PORTING

37/64" Diameter up to 1-1/2" Diameter Drill
215 RPM = .012 Feed

1-1/2" Diameter Drill
165 RPM = .012 Feed

1-47/64" Diameter up to 2" Diameter Drill
130 RPM = .008 Feed

2-1/2" Diameter Drill
100 RPM = .008 Feed

Run Split Flange Tap Drills at 750 RPM

Tap all Split Flange Holes at 250 RPM

Tap all JIC at 105 RPM

Tap 1/2" through 3/4" NPT at 135 RPM

Tap 1" through 1-1/4" NPT at 105 RPM

Tap 1-1/2" NPT at 80 RPM

DOWELING INSTRUCTIONS
3100 / 5100 / 7500 SERIES

1. Regardless of the type of machine being used, Bridgeport mill type, or drill press, the head must be square to the table. Turn the head using a dial indicator. This must be better than .005” TIR over a 12” diameter.

2. Be sure machine table and part are free from nicks or burrs that may cause raised areas. (Use deburring block)

3. Place doweling fixture pilot into bores of housing. Be sure fixture is seated flat against the face of the housing.

4. Using a drill that is the nominal (see chart below) size of the dowel pin, spot drill to a depth of the full drill point only. (This produces a centered cone shaped hole and minimizes wandering of the drill in the next step).

5. With a drill that is 1/64” smaller (see chart below) drill to depth that is 1/16” deeper than the finish reamed depth.

6. Using the proper size reamer, finish to depth.

SERIES	FIXTURES	SPOT DRILL SIZE	PRE-DRILL SIZE	REAMER SIZE	FINISHED REAMED DEPTH
3100	T-1009	3/8"	23/64"	.375	.625
5100	T-1010	3/8"	23/64"	.375	.625
7600	T-1011	5/8"	39/64"	.625	1.000

TOOLING LIST

PART #	DESCRIPTION
162-2043	1/4”JIC cutter, #2 M/T
162-2056	3/8”JIC cutter, #2 M/T
162-3075	1/2”JIC cutter, #3 M/T
162-3087	5/8”JIC cutter, #3 M/T
162-3106	3/4”JIC cutter, #3 M/T
162-3118	7/8”JIC cutter, #3 M/T
162-3131	1” JIC cutter, #3 M/T
162-4162	1 1/4”JIC cutter, #3 M/T
162-4187	1 1/2”JIC cutter, #3 M/T
165-001	Counterbore Tool 1 1/2”
165-002	Counterbore Tool 2”
4547500**	Tapping Head Attachment W/4M/T-3JT Arbor and J-440, J-441 collets
R-8ARBOR	1 1/4” Shell Mill Arbor
SF-1/2	1/2”SF Fixture W / hardware
SF-3/4	3/4”SF Fixture W / hardware
SF-1	1”SF Fixture W / hardware
SF-1-1/4	1-1/4”SF Fixture W / hardware
SF-1-1/2	1-1/2”SF Fixture W / hardware
SF-2	2”SF Fixture W / hardware
VISE	Self Centering Vise
Countersink	Countersink Tool
Drill chuck	Drill Chuck W / Arbor
1-2S	1-2 Sleeve
2-3S	2-3 Sleeve
3-4S	3-4 Sleeve
4-5S	4-5 Sleeve
Drill/43/64	43/64 #2 Taper Shank Drill
Drill/51/64	51/64 #2 Taper Shank Drill
Drill/31/32	31/32 #3 Taper Shank Drill
Drill/1-1/16	1-1/16 #3 Taper Shank Drill
Drill/1-3/16	1-3/16 #4 Taper Shank Drill
Drill/1-1/2	1-1/2 #4 Taper Shank Drill
Drill/1-47/64	1-47/64 #4 Taper Shank Drill
R	R Drill
Drill/7/16	7/16 Drill
Drill/37/64	37/64 #2 Taper Shank Drill
Drill/29/32	29/32 #3 Taper Shank Drill
Drill/1-1/8	1-1/8 #3 Taper Shank Drill
Drill/1-9/64	1-9/64 #4 Taper Shank Drill
Drill/1/2	1/2” Drill
Drill/3/4	3/4” #2 Taper Shank Drill
Drill/1	1” #3 Taper Shank Drill
Drill/1-1/4	1-1/4 #3 Taper Shank Drill
Drill/2	2” #4 Taper Shank Drill (stub length)
3/4-ST./TAP	3/4 x 16 Straight Tap

TOOLING LIST

74420	3/4 St. Tap Holder W / #4 MT
7/8-ST./TAP	7/8 x 14 Straight Tap
01155	7/8 St. Tap Holder W/ #3 MT
1-1/16-ST./TAP	1-1/16 x 12 Straight Tap
04106	1-1/16 Tap Holder W/ #3 MT
1-3/16-ST./TAP	1-3/16 x 12 Straight Tap
04108	1-3/16 Tap Holder W/ #3 MT
1-5/16-ST./TAP	1-5/16 x 12 Straight Tap
04110	1-5/16 Tap Holder W/ #3 MT
1-5/8-ST./TAP	1-5/8 x 12 Straight Tap
04114	1-5/8 Tap Holder W/ #4 MT
1-7/8-ST./TAP	1-7/8 x 12 Straight Tap
04118	1-7/8 Tap Holder W/ #4 MT
1/8-TAP	1/8 x 27 Pipe Tap
1/4-TAP	1/4 x 18 Pipe Tap
01197	1/4 NPT Tap Holder W/ #3 MT
3/8-TAP	3/8 x 18 Pipe Tap
01201	3/8 NPT Tap Holder W/ #4 MT
1/2-TAP	1/2 x 14 Pipe Tap
74451	1/2 NPT Tap Holder W/ #4 MT
3/4-TAP	3/4 x 14 Pipe Tap
01208	3/4 NPT Tap Holder W/ #4 MT
1-TAP	1 x 11-1/2 Pipe Tap
04141	1 NPT Tap Holder W/ #4 MT
1-1/4-TAP	1-1/4 x 11-1/2 Pipe Tap
70443	1-1/4 NPT Tap Holder W/ #4 MT
1-1/2-TAP	1-1/2 x 11-1/2 Pipe Tap
04144	1-1/2 NPT Tap Holder W/ #4 MT
5/16-ST./TAP	5/16 x 18 Straight Tap
3/8-ST./TAP	3/8 x 16 Straight Tap
7/16-ST./TAP	7/16 x 14 Straight Tap
1/2-ST./TAP	1/2 x 13 Straight Tap
F-DRILL	F Drill
5/16-DRILL	5/16 Drill
U-DRILL	U Drill
27/64-DRILL	27/64 Drill
T-1009	3100 Dowelling Jig
T-1010	5100 Dowelling Jig
T-1011	7600 Dowelling Jig
T-1164	197 Bushing Removal Kit
T-1188	197 Bushing Insertion Kit
T-1175	257 Bushing Insertion Kit
T-1180	257 Bushing Removal Kit

** **The items marked with ** need to advise what arbor is required.**

*** **The quantity is only one for any of these items on this tooling list.**

197 OUTBOARD BEARING LOAD RATINGS

SIDE LOAD (WITH OUTBOARD BEARING) 800 LBS. OR 3500 NEWTONS

(CODE)	DRIVE TYPE	PL FACTOR
14	"B" SPLINE	8000 (INTEGRAL)
32	"BB" KEYED	8000 (INTEGRAL)
87	"BB" SPLINED	10,000 (INTEGRAL)
1	CONNECTING	6,000
C	CONTINENTAL	6000 EXCEPT CODES (04, 21, 24, 32, 84 CM1 & SPL) – CONSULT FACTORY

197	1/2" THRU 3/4" GEAR WIDTH =	CONSULT FACTORY
	1" THRU 1-1/4" GEAR WIDTH =	4000 PSI
	1-1/2" GEAR WIDTH =	3750 PSI
	1-3/4" GEAR WIDTH =	3500 PSI
	2" GEAR WIDTH =	3250 PSI

1 BAR = 14.5 PSI

1 CU. IN. = 16.38 CU. CM

1 LB = 4.448 N

1 GPM = 231 CU. IN.

1 FT*LB = 1.356 N*M

1 FT*LB = 12 IN*LB

$$\text{TORQUE} = \frac{(\text{PSI X DISPLACEMENT})}{6.28}$$

$$\text{HP} = \frac{(\text{GPM X PSI})}{1714}$$

$$\text{HP} = \frac{(\text{TORQUE X RPM})}{63025}$$ TORQUE = IN*LB

257 OUTBOARD BEARING LOAD RATINGS

SIDE LOAD (WITH OUTBOARD BEARING) 1125 LBS. OR 5000 NEWTONS

(CODE)	DRIVE TYPE	PL FACTOR
14	"B" SPLINE	6500 (INTEGRAL)
32	"BB" KEYED	6500 (INTEGRAL)
87	"BB" SPLINED	10,000 (INTEGRAL)
6	"C" SPLINE	16,000 (INTEGRAL)
00	"C" KEYED	14,000 (INTEGRAL)
1	CONNECTING	8,000
C	CONTINENTAL	8000 CODES 00, 6, & 87 6500 CODE 14 4500 CODE 29 CODE 32 CONSULT FACTORY

257	1/2" THRU 1-1/4" GEAR WIDTH =	4500 PSI
	1-1/2" GEAR WIDTH =	3500 PSI
	1-3/4" GEAR WIDTH =	3250 PSI
	2" GEAR WIDTH =	3000 PSI
	2-1/4" GEAR WIDTH =	2750 PSI
	2-1/2" GEAR WIDTH =	2500 PSI

1 BAR = 14.5 PSI

1 CU. IN. = 16.38 CU. CM

1 LB = 4.448 N

1 GPM = 231 CU. IN.

1 FT*LB = 1.356 N*M 1 FT*LB = 12 IN*LB

$$\text{TORQUE} = \frac{(\text{PSI X DISPLACEMENT})}{6.28}$$

$$\text{HP} = \frac{(\text{GPM X PSI})}{1714}$$

$$\text{HP} = \frac{(\text{TORQUE X RPM})}{63025}$$ TORQUE = IN*LB

360 OUTBOARD BEARING LOAD RATINGS

SIDE LOAD (WITH OUTBOARD BEARING) 1450 LBS. OR 6500 NEWTONS

(CODE)	DRIVE TYPE	PL FACTOR
00	"C" KEYED	9,300 (INTEGRAL)
6	"C" SPLINE	13,500 (INTEGRAL)
87	“BB” SPLINE	7000
1	CONNECTING	11,000

360	1/2" THRU 2" GEAR WIDTH	=	3500 PSI
	2-1/4" GEAR WIDTH	=	3250 PSI
	2-1/2″ GEAR WIDTH	=	3000 PSI

1 BAR = 14.5 PSI

1 CU. IN. = 16.38 CU. CM

1 LB = 4.448 N

1 GPM = 231 CU. IN.

1 FT*LB = 1.356 N*M 1 FT*LB = 12 IN*LB

$$\text{TORQUE} = \frac{(\text{PSI X DISPLACEMENT})}{6.28}$$

$$\text{HP} = \frac{(\text{GPM X PSI})}{1714}$$

$$\text{HP} = \frac{(\text{TORQUE X RPM})}{63025}$$ TORQUE = IN*LB

2100 / 3000 / 3100 OUTBOARD BEARING LOAD RATINGS

SIDE LOAD (WITH OUTBOARD BEARING) 800 LBS. OR 3500 NEWTONS

(CODE)	DRIVE TYPE	PL FACTOR
29	"B" KEYED	5700 (INTEGRAL)
55	"B" KEYED	5700 (INTEGRAL)
32	"BB" KEYED	8600 (INTEGRAL)
56	"BB" KEYED	8600 (INTEGRAL)
84	"A" SPLINE	2700 (INTEGRAL)
14	"B" SPLINE	8300 (INTEGRAL)
54	"B" SPLINE	8300 (INTEGRAL)
1	CONNECTING 5500	
C	CONTINENTAL 5500 EXCEPT CODE 84	

3000	1/2" THRU 1-1/2" GEAR WIDTH =	2500 PSI
	1-3/4" THRU 2" GEAR WIDTH =	2250 PSI
3100/2100	1/2" THRU 1-1/2" GEAR WIDTH =	3000 PSI
	1-3/4" THRU 2" GEAR WIDTH =	2500 PSI

1 BAR = 14.5 PSI

1 CU. IN. = 16.38 CU. CM

1 LB = 4.448 N

1 GPM = 231 CU. IN.

1 FT*LB = 1.356 N*M 1 FT*LB = 12 IN*LB

$$\text{TORQUE} = \frac{(\text{PSI X DISPLACEMENT})}{6.28}$$

$$\text{HP} = \frac{(\text{GPM X PSI})}{1714}$$

$$\text{HP} = \frac{(\text{TORQUE X RPM})}{63025}$$ TORQUE = IN*LB

5000 / 5100 / 5151 OUTBOARD BEARING LOAD RATINGS

SIDE LOAD (WITH OUTBOARD BEARING) 1125 LBS. OR 5000 NEWTONS

(CODE)	DRIVE TYPE	PL FACTOR
32	"BB" KEYED	6600 (INTEGRAL)
00	"C" KEYED	13,000 (INTEGRAL)
14	"B" SPLINE	6400 (INTEGRAL)
6	"C" SPLINE	13,850 (INTEGRAL)
1	CONNECTING	8000
C	CONTINENTAL	8000 EXCEPT CODE 14 & 32

5000	1/2" THRU 1-1/2" GEAR WIDTH =	2500 PSI
	1-3/4" THRU 2-1/2" GEAR WIDTH =	2000 PSI
5100	1/2" THRU 1-3/4" GEAR WIDTH =	3000 PSI
	2" THRU 2-1/2" GEAR WIDTH =	2500 PSI
5151	1-3/4" THRU 2-1/2" GEAR WIDTH =	3000 PSI

1 BAR = 14.5 PSI

1 CU. IN. = 16.38 CU. CM

1 LB = 4.448 N

1 GPM = 231 CU. IN.

1 FT*LB = 1.356 N*M 1 FT*LB = 12 IN*LB

$$\text{TORQUE} = \frac{(\text{PSI X DISPLACEMENT})}{6.28}$$

$$\text{HP} = \frac{(\text{GPM X PSI})}{1714}$$

$$\text{HP} = \frac{(\text{TORQUE X RPM})}{63025}$$ TORQUE = IN*LB

7500 / 7600 OUTBOARD BEARING LOAD RATINGS

SIDE LOAD (WITH OUTBOARD BEARING) 1450 LBS. OR 6500 NEWTONS

(CODE)	DRIVE TYPE	PL FACTOR
00	"C" KEYED	8,300 (INTEGRAL)
6	"C" SPLINE	12,000 (INTEGRAL)
1	CONNECTING	9450
C	CONTINENTAL	7750

7500	1/2" THRU 2" GEAR WIDTH =	2500 PSI
	2-1/4" THRU 2-1/2" GEAR WIDTH =	2250 PSI
	2-3/4" THRU 3" GEAR WIDTH =	2000 PSI
7600	1/2" THRU 1-3/4" GEAR WIDTH =	3000 PSI
	2" THRU 2-1/2" GEAR WIDTH =	2500 PSI
	2-3/4" THRU 3" GEAR WIDTH =	2000 PSI

1 BAR = 14.5 PSI

1 CU. IN. = 16.38 CU. CM

1 LB = 4.448 N

1 GPM = 231 CU. IN.

1 FT*LB = 1.356 N*M 1 FT*LB = 12 IN*LB

$$\text{TORQUE} = \frac{(\text{PSI X DISPLACEMENT})}{6.28}$$

$$\text{HP} = \frac{(\text{GPM X PSI})}{1714}$$

$$\text{HP} = \frac{(\text{TORQUE X RPM})}{63025}$$ TORQUE = IN*LB

PERMCO

1/16/2009

124 Gearshaft Availability

					Gear Widths													
Code	Part Number	Description		Ext.	02	03	05	06	07	08	10	11	12	13	15	16	17	18	20
54	024-01104-**DR	B Spline	T	1.62	83	83	X		X		X		X		X		X		X
55	024-01213-**DR	B Key	T	1.62			X		X		X		X		X		X		X
85	024-01214-**DR	A Spline	T	1.25			X		X		X		X		X		X		X
86	024-01215-**DR	A Key	T	1.25			X		X		X		X		X		X		X
99	024-01236-**DR	1:4 Taper, 5/16-24 Internal Thread, 3/8" Wide Bracket	T	N/A			C		C		X		X		X		X		X
*	024-01242-**DR	1:8 Taper, M12 x 1.5 External Thread	T	N/A	Superseded By 024-01276-**DR														
*	024-01244-**DR	1:5 Taper, M12 x 1.5 External Thread, CSI Code 60	T	N/A	Not In PPN														
*	024-01267-**DR	Ø.875 Key	T	2.31	Not In PPN														
55XL	024-01268-**DR	B Key Long	T	2.81			X		X		X		X		X		X		X
75	024-01276-**DR	1:8 Taper, M12 x 1.5 External Thread	T	N/A			C		C		X		X		C		C		C
45	024-01284-**DR	1:4 Taper, 5/16-24 Internal Thread, 3/4" Wide Bracket	T	N/A			X		X	X	X	X	X		X		X		X
*	024-01295-**DR	A Spline, Undercut for Tell-Tale	T	1.25			C		C		C		C		C		C		C
*	024-01330-**DR	11 Tooth Spline, 1.99" Shaft Ext, (1/2" Longer than Std)	S	1.99											X				
86XL	024-01331-**DR	A Keyed, Long	T	2.31			X		X		X		X		X		C		C
*	024-01342-**DR	Ø.750 Key, 19-1	T	1.25	Not In PPN														
*	024-01344-**DR	11 Tooth Spline, 19-4	T	1.49							X		X		X		X		X
24	024-01416-**DR	Ø.750 Key, 19-1 Long	T	2.31			X		X		X		X		X		X		X
*	024-01445-**DR	B Spline, 1/4-20 Internal Threads	T	1.62	Not In PPN														
*	024-01470-**DR	Ø.750 Key	S	2.66	Superseded By 024-01528-**DR														
*	024-01482-**DR	A Key	S	1.25			DE												
*	024-01518-**DR	Ø.750 Key, 19-1 Long	S	2.31										X					
*	024-01528-**DR	Ø.750 Key, Ø.875 Shaft Seal, Zamboni	S	2.66									X				X		
*	024-01585-**DR	11 Tooth Spline, 19-4	S	1.49	Not In PPN														

* Not In Code Book

T - Tandem (Rear Spline)
S - Single (No Rear Spline)

X - In Stock
C - Check For Availability

197 SERIES SHAFT SHEET

PART NUMBER	SHAFT DIAMETER	SHAFT LENGTH	APPROX. EXTEN.	SPLINE	KEY SIZE WIDTH X LENGTH	SAE TYPE	SHAFT CODE	REMARKS
023-00979	3/4"	4 41/64"	1 1/2"	11 TOOTH				CUMMINGS DIESEL ACCESSORY DRIVE
024-00409-HF	1"	5 13/16"	2 13/16"		1/4" X 1 3/4"			
024-00740	7/8"	5 3/8"				B		TAPERED & THREADED 5/8"-18UNF EXT.
024-00835	5/8"	5 5/32"	2"		3/16" X 1 1/4"		85	HYDRECO REPL. OBSOLETE
023-00976	3/4"	4 5/8"	1 1/2"	11 TOOTH		19.4		
BC-0024	1"	4 3/4"	1 5/8"	6 TOOTH			57	
BC-0024-3	1.100"	5 1/4"		6 TOOTH		B	57XL	LONGER SPLINE
024-00513	25MM	5 1/4"					CM1	25MM STRAIGHT KEYED
DC-0024	1"	5 3/64"	1 15/16"		1/4" X 1 1/4"		32	
ZG-0024	1 1/4"	5 19/64"	2 3/16"	14 TOOTH		C	6	
ZG-0024-HCL	1 1/4"	5 19/64"	2 3/16"	14 TOOTH		C		MADE WITH 4620 STEEL
ZH-0024	5/8"	4 29/64"	1 1/4"	9 TOOTH		A	84	
ZI-0024	7/8"	4 47/64"	1 5/8"	13 TOOTH		B	14	
ZI-0024-XLT	7/8"	4 15/16"	1 13/16"	13 TOOTH		B	14XL	OBSOLETE VENDORED
ZJ-0024	7/8"	4 45/64"	1 5/8"		1/4" x 1"	B	29	
ZJ-0024-XL	7/8"	5 57/64"	2 3/4"		1/4" x 1 3/4"	B	29XL	EXTRA LONG, USE KEY W09-01
ZM-0024-1	5 8"	4 61/64"			WDRF KEY	B	02	KEY & THREADED END 1/2"-20UNF
ZP-0024	7/8"	5 25/64"	2 1/4"		WDRF KEY		21	TAPERED W/INT THREAD 5/16-24
ZQ-0024	1 1/4"	5 19/64"	2 3/16"		5/16" X 1 1/2"		00	
ZT-0024	1"	4 15/16"	1 13/16"	15 TOOTH		BB	87	
ZU-0024	3/4"	5 1/2"	2 3/8"		3/16" X 1 3/4"		24	
ZW-0024	7/8"	5 5/8"	2 17/32"		1/4" X 7/8"	B	04/89	KEYED & THREADED END 5/8"-18UNF
ZW-0024-SPL	7/8"	5 7/8"	2 7/8"		1/4" X 7/8"	B		KEYED & THREADED END 5/8"-18UNF

022-00413-CS		CONNECTING SHAFT FOR TANDEMS

257 SERIES SHAFT SHEET

PART NUMBER	SHAFT DIAMETER	SHAFT LENGTH	APPROX. EXTEN.	SPLINE	KEY SIZE WIDTH X LENGTH	SAE TYPE	SHAFT CODE	REMARKS
024-00851	7/8"	4 1/2	1 5/8"	13 TOOTH		B	14	
024-00850	1"	4 13/16	1 15/16"		1/4" X 1 1/4"		32	
024-00848	1 1/4"	5 1/16	2 3/16"		5/16" X 1 1/2"	C	00	
024-00849	1 1/4"	5 1/16	2 3/16"	14 TOOTH		C	6	
024-00923	1"	4 11/16	1 15/16"	15 TOOTH		BB	87	
212-0999-001	1.1"			6 TOOTH			2	SPECIAL FOR MINING INDUSTRY
212-0499-502	1 1/4"		3 1/8"		5/16" X 2 1/4"		62	SPECIAL FOR MINING INDUSTRY

022-00837		CONNECTING SHAFT FOR TANDEMS

Hydraulic/Pneumatic Products

1500 Frost Road - Post Office Box 2068 - Streetsboro, Ohio 44241-0869 - (330)626-2801 - Fax: (330)626-2805

To: All Permco Distributors

Subject: 257 Series Code 2, 1.1" Diameter 6 Spline Continental Shaft

We are pleased to announce a new 257 Series Code 2, Continential Shaft; The 1.1" diameter 6 spline shaft is very popular in the coal machinery industry found on continuous miners and other heavy duty shaft requirement applications. See below for dimensions and component requirements.

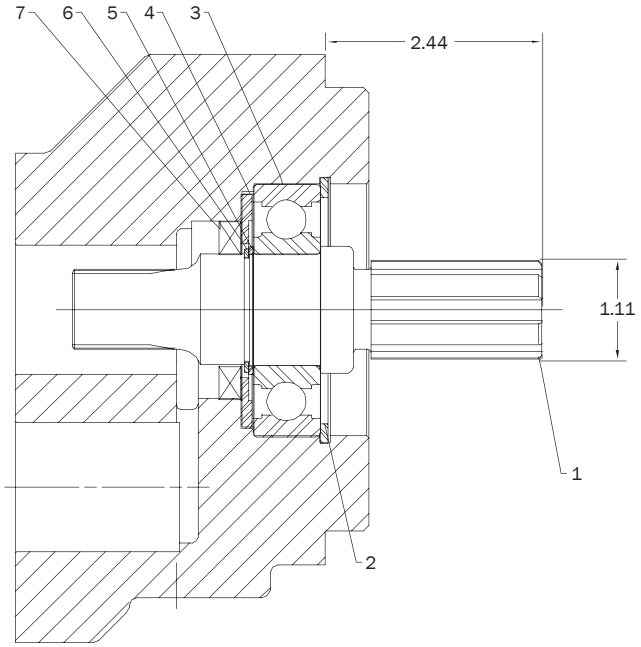

#		Part Number	Description	Qty
1		212-0999-001	1.1" Diameter 6 Spline	1
2		W023-283	Snap Ring	1
3		W58-47	Ball Bearing	1
4		ZB-0558	Seal Retainer	1
5		558-01017	Spacer	1
6		565-01016	Retainer Ring	1
7		226-01015	Shaft Seal Pump	1
8		280-1772-186	Shaft Seal Motor	1

NFPA
Solutions through motion technology

The Sensible Choice

Hydraulic/Pneumatic Products

1500 Frost Road - Post Office Box 2068 - Streetsboro, Ohio 44241-0869 - (330)626-2801 - Fax: (330)626-2805

To: All Permco Distributors

Subject: 257 Series Code 62, 1-1/4" Keyed Continental Shaft

We are pleased to announce a new 257 Series Continential Shaft. The code 62 shaft is a 1-1/4" diameter keyed shaft with internal threaded end; you will find this shaft is very popular in the coal machinery industry found on continuous miners and other heavy duty shaft requirement applications. See below for dimensions and component requirements.

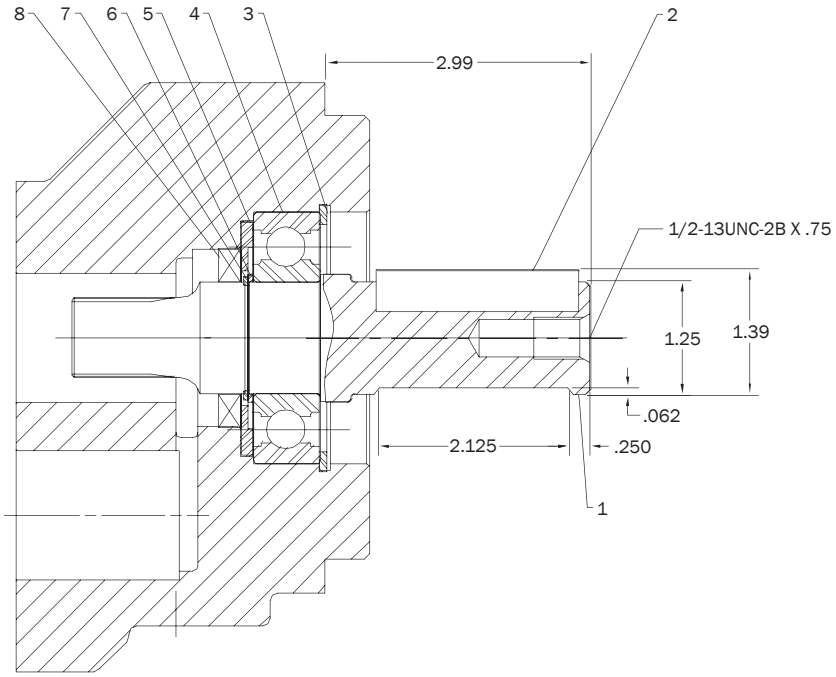

#		Part Number	Description	Qty
1		212-0499-502	Code 62, 1-1/4" Keyed Shaft	1
2		W09-44	Shaft Key 5/16 x 15/32 x 2-1/4	1
3		W023-283	Snap Ring	1
4		W58-47	Ball Bearing	1
5		ZB-0558	Seal Retainer	1
6		558-01017	Spacer	1
7		565-01016	Retainer Ring	1
8		226-01015	Shaft Seal Pump	1
9		280-1772-186	Shaft Seal Motor	1

NFPA
Solutions through motion technology

The Sensible Choice

1500 SERIES SHAFT SHEET

PART NUMBER	SHAFT DIAMETER	SHAFT LENGTH	APPROX. EXTEN.	SPLINE	KEY SIZE WIDTH X LENGTH	SAE TYPE	SHAFT CODE	REMARKS
AA-0023	1 1/4"	6 3/4"	2 15/16"	14 TOOTH		C	01	OBSOLETE
AA-0023-1	1 1/4"	6"	2 3/16"	14 TOOTH		C	08	OBSOLETE
AJ-0023	3/4"	4 7/8"	1 5/16"		3/16" X 7/8"		06	
AJ-0023-TK	3/4"	6 5/16"	2 3/4"		1/8" X 3/4"			OBSOLETE
AM-0023	3/4"	6 1/4"	2 3/4"		1/4" X 2"		19	
AS-0023	63/64"	4 7/8"	1 5/16"		1/4" X 1 1/4"		11	
AT-0023	7/8"	5 5/16"	1 3/4"	6 TOOTH			12	OBSOLETE
AV-0023	1 1/4"	5 13/16"	2"		5/16" X 1 3/8"	C	14	VENDERED
CY-0023	3/4"	6"	2 7/16"		3/16" X 1 1/8"		21	
EA-0023	7/8"	5 1/8"	1 5/8"		1/4" X 1"	B	1	
IA-0023-1	5/8"	5 15/32"	1 15/16"		5/32" X 3/4"		02	THREADED END 1/2"-20UNF
JA-0023	1"	5 1/4"	1 11/16"	6 TOOTH			2	
LA-0023	7/8"	5 5/16"	1 3/4"		3/16" X 1 1/4"		7	
LA-0023-1	7/8"	5 3/8"	1 13/16"		1/4" X 1 1/4"		20	
LA-0023-2	7/8"	6 5/16"	2 3/4"		3/16" X 1 1/4"			
MA-0023	1"	5 9/16"	2"	6 TOOTH			8	
OA-0023	5/8"	4 3/4"	1 1/4"		5/32" X 3/4"	A	03	
RA-0023-1	1"	5 1/2"	1 15/16"		1/4" X 1"		00	
RA-0023-2	1"	7 1/4"	3 11/16"		1/4" X 2 1/4"		07	
SA-0023	7/8"	5 1/8"	1 9/16"	13 TOOTH		B	05	
SA-0023-1	7/8"	7 1/8"	3 9/16"	13 TOOTH		B	17	
YA-0023	5/8"	4 3/4"	1 3/16"	9 TOOTH		A	85	
C-810104	1"	4 15/16"	1 3/8"	15 TOOTH				OBSOLETE
C-810136	3/4"	5 3/16"	1 5/8"	11 TOOTH				REPLACEMENT FOR CAT & GALION
QA-0023	7/8"	6 1/32"	2 7/32"		1/4" X 7/8"	B	04	THREADED END 5/8"-18UNF
DO-0023	7/8"	5 17/32"	1 7/8"		3/16" X 1 1/4"		26	OBSOLETE

AZ-0022								CONNECTING SHAFT FOR TANDEMS

2500 SERIES SHAFT SHEET

PART NUMBER	SHAFT DIAMETER	SHAFT LENGTH	APPROX. EXTEN.	SPLINE	KEY SIZE WIDTH X LENGTH	SAE TYPE	SHAFT CODE	REMARKS
AB-0024	1.10"	6 3/8"	2 7/16"	6 TOOTH			2	TYPE I
CB-0024	7/8"	6 1/8"	1 1/2"	13 TOOTH		B	37	TYPE II
DB-0024	1 1/4"	6 7/8"	2 1/4"	14 TOOTH		C	42	TYPE II
DB-0024-1	1 1/4"	7 1/16"	2 7/16"	14 TOOTH		C	58	TYPE II OBSOLETE
EA-0024	7/8"	5 13/16"	1 7/8"	6 TOOTH			39	TYPE I
EB-0024	1 1/4"	6 3/32"	1 1/2"	14 TOOTH		C	44	TYPE II
FA-0024-1	63/64"	5 15/16"	2"		1/4" X 1 1/4"		41	TYPE I OBSOLETE
FB-0024	1"	6 3/8"	1 3/4"		1/4" X 1 1/4"		36	TYPE II
FC-0024	63/64"	6 1/4"	1 5/8"		1/4" X 1"		69	TYPE II
GA-0024	1"	5 3/4"	1 13/16"		1/4" X 1 1/4"		32	TYPE I
GA-0024-S	1"	5 7/16"	1 1/2"		1/4" X 1 1/8"		4	TYPE I OBSOLETE
GA-0024-SP	1"	7 3/8"	3 7/16"		1/4" X 1 3/4"			TYPE II OBSOLETE
GB-0024	63/64"	6 9/32"	1 5/8"	6 TOOTH			35	TYPE II
IB-0024	7/8"	7 13/32"	2 3/4"		3/16" X 1 1/4"		34	TYPE II OBSOLETE
JB-0024	7/8"	6 9/16"	1 15/16"	6 TOOTH			88	TYPE II
KA-0024	1 1/4"	5 7/8"	1 15/16"		1/4" X 1 1/4"		49	TYPE I
MB-0024	1 1/4"	5 1/2"	1 9/16"		1/4" X 1 1/4"		8	TYPE I OBSOLETE
OA-0024	1 1/4"	6 1/8"	2 3/16"	14 TOOTH		C	6	TYPE I
OB-0024	3/4"	6 1/8"	1 1/2"		3/16" X 7/8"		47	TYPE II OBSOLETE
QA-0024	1 1/4"	6 1/8"	2 3/16"		5/16" X 1 1/2"	C	00	TYPE I
QA-0024-XL	1 1/4"	7 1/4"	3 5/16"		5/16" X 1 1/2"		45	EXTRA LONG, OBSOLETE
SA-0024	7/8"	6 15/32"	2 1/2"		1/4" X 7/8"	B	15	TYPE I EXTER. THREADED END
SD-0024	1"	5 15/16"	2"	6 TOOTH			83	TYPE I GALIS 1X
TB-0024-1	1 1/4"	7 11/16"	3 1/8"		5/16" X 2 1/4"		62	TYPE III
UA-0024	7/8"	5 1/2"	1 5/8"	13 TOOTH		B	14	TYPE I
UA-0024-S	7/8"	5 1/2"	1 5/8"	13 TOOTH		B		OBSOLETE, .96 FULL SPLINE LGTH.
VA-0024	7/8"	5 11/16"	1 3/4"		3/16" X 1 1/4"		27	TYPE I
VA-0024-1	7/8"	6 9/16"	2 5/8"		3/16" X 1 1/4"		28	TYPE I LONG EXT.

2500 SERIES SHAFT SHEET CONTINUED

PART NUMBER	SHAFT DIAMETER	SHAFT LENGTH	APPROX. EXTEN.	SPLINE	KEY SIZE WIDTH X LENGTH	SAE TYPE	SHAFT CODE	REMARKS
WA-0024	1 1/8"	6 5/16"	2 3/8"		1/4" X 1 3/4"		1	TYPE I
WD-0024	1 1/8"	6 1/16"	2 1/8"	6 TOOTH			08	TYPE I
YC-0024	7/8"	7 9/32"	2 3/4"		5/16" X 2"		72	TYPE III OBSOLETE
ZB-0024	7/8"	5 9/16"	1 5/8"		1/4" X 1"	B	29	TYPE I
ZN-0024		6 3/32"	2 1/8"		5/32" WDRF		9	TYPE I OBSOLETE
ZS-0024-LED	7/8"	7 7/8"	3 11/16"		3/16" X 1 1/4"		SPL	TYPE II
XB-0024	7/8"							TAPERED, EX THRD 5/8-18
024-00500	13/16"	6 3/8"	2 1/4"		3/16" X 1 1/4"			TYPE II
4833	7/8"	8 1/4"			3/16" X 1 1/4"			
023-01611	1 1/4"	7 11/16"	3 1/8"		5/16" X 1 1/2"			TYPE III FLETCHER ROOF BOLTER
023-01592	1 1/4"	7 11/16"	3 1/8"		5/16" X 2 1/4"			TYPE III SPECIAL NUT W/LOCKNUT
023-01593	1 1/4"	7 11/16"	3 1/8"	14 TOOTH				TYPE III SPECIAL NUT W/LOCKNUT

SZ-0022		CONNECTING SHAFT FOR TANDEMS

Hydraulic/Pneumatic Products

1500 Frost Road - Post Office Box 2068 - Streetsboro, Ohio 44241-0869 - (330)626-2801 - Fax: (330)626-2805

To: All Permco Distributors — October 19, 2009

Subject: 2500 Series 1.25" Diameter Keyed Continental Shaft

We are pleased to announce a new 2500 Series Continental Shaft; The 1.25" diameter keyed shaft is very popular in the coal machinery industry found on Fletcher roof bolters, mining equipment and other heavy duty shaft requirement applications. The special application shaft is similar to the Code 62 2500 series shaft but with slight variations. Because this is a special application product, minimum purchase quantities may apply; consult factory for availability, shaft end cover options and component coding assistance.
See below for dimensions and component requirements.

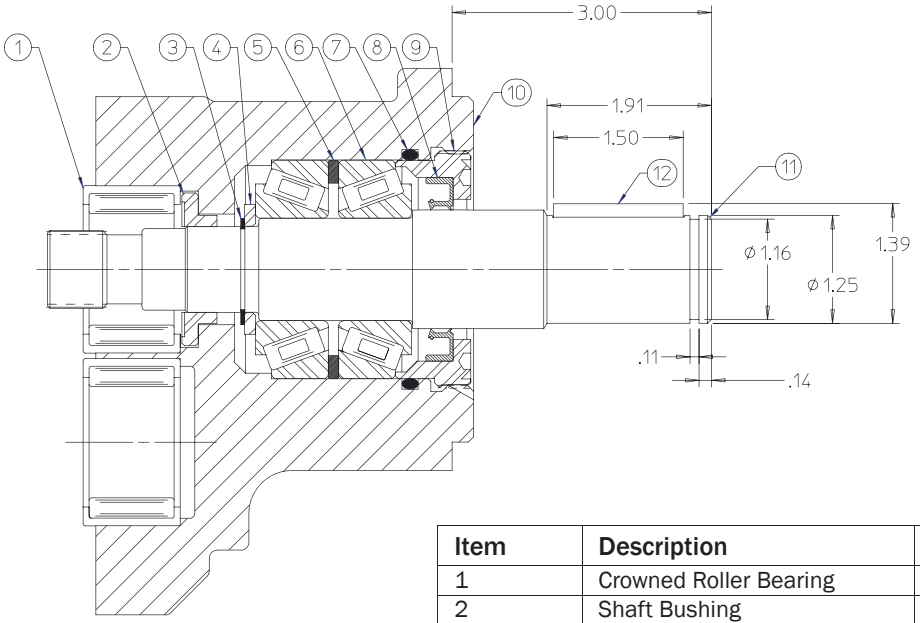

	Item	Description	Part #	Qty
	1	Crowned Roller Bearing	R-0921	2
	2	Shaft Bushing	ZQ-1909	1
	3	Snap Ring	W86-100	1
*	4	Bearing Spacer	XZ-0558-2	1
	5	Bearing Spacer	FA-0558	1
	6	Tapered Bearing	W015-7	2
	7	O-Ring	K-2995-47	1
	8	Pump Shaft Seal Motor Shaft Seal	W62-26-10 W62-49-1	1
	9	Shaft Seal/Bearing Retainer	GZ-0961	1
	10	SEC, Type III	See Code Book	1
	11	Drive Shaft 1-1/4 Key	023-01611	1
	12	5/16 x 15/32 x 1-1/2 Key	W09-27	1
	Not Shown	Check Valve Assembly, Motor Plug, Pump	L-0280-K S-0280	2 1
	Not Shown	Roll Pin	W004-19	1
	Not Shown	Pipe Plug	W0-17	1

* *See 2500 series service manual page 12 for assembly instructions*

NFPA Solutions through motion technology

The Sensible Choice

Hydraulic/Pneumatic Products

1500 Frost Road - Post Office Box 2068 - Streetsboro, Ohio 44241-0869 - (330)626-2801 - Fax: (330)626-2805

To: All Permco Distributors — October 19, 2009

Subject: 2500 Series 1.25" Diameter Keyed Continental Shaft

We are pleased to announce a new 2500 Series Continental Shaft; The 1.25" diameter keyed shaft is very popular in the forestry machinery industry found on cutting heads and other heavy duty shaft requirement applications where high vibrations and extreme shaft loads are experienced. The special application shaft consist of a lock nut and washer to set bearing pre-loads and requires special machining to the shaft end cover. Because this is a special application product, minimum purchase quantities may apply; consult factory for availability, shaft end cover options and component coding assistance. See below for dimensions and component requirements.

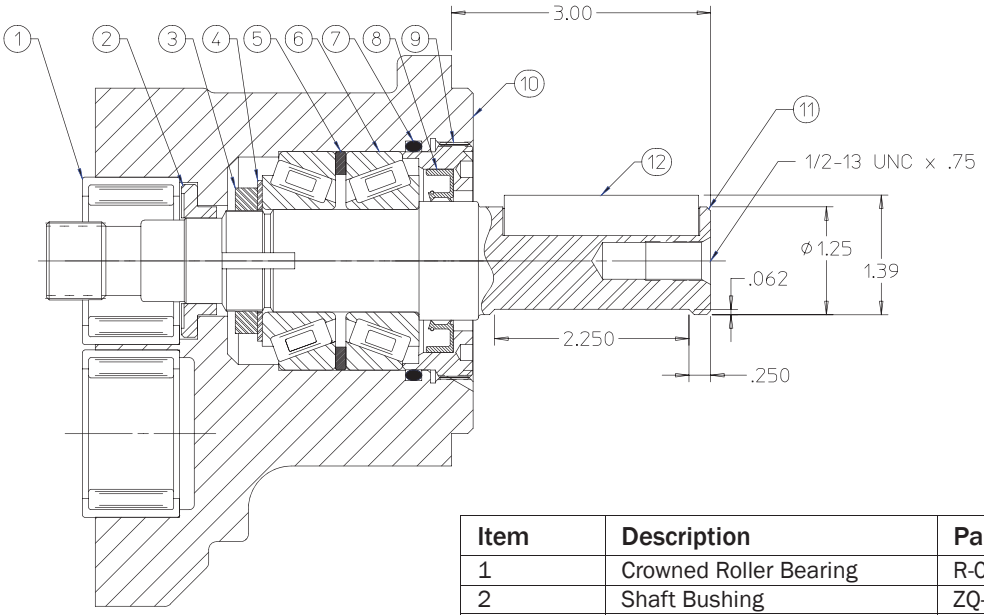

	Item	Description	Part #	Qty
	1	Crowned Roller Bearing	R-0921	2
	2	Shaft Bushing	ZQ-1909	1
	3	Locknut	900-01595	1
	4	Lockwasher	900-01596	1
	5	Bearing Spacer	FA-0558	1
	6	Tapered Bearing	W015-7	2
	7	O-Ring	K-2995-47	1
	8	Pump Shaft Seal Motor Shaft Seal	W62-26-10 W62-49-1	1
	9	Shaft Seal/Bearing Retainer	961-01594	1
*	10	SEC, Type III, 2 Bolt B Flange	574-01591	1
	11	Drive Shaft 1-1/4 Key	023-01592	1
	12	5/16 x 15/32 x 2-1/4 Key	W09-44	1
	Not Shown	Check Valve Assembly, Motor Plug, Pump	L-0280-K S-0280	2 1
	Not Shown	Roll Pin	W004-19	1
	Not Shown	Pipe Plug	W0-17	1

* *Consult factory for additional shaft end cover flange types*

NFPA Solutions through motion technology

The Sensible Choice

Hydraulic/Pneumatic Products

1500 Frost Road - Post Office Box 2068 - Streetsboro, Ohio 44241-0869 - (330)626-2801 - Fax: (330)626-2805

To: All Permco Distributors — October 19, 2009

Subject: 2500 Series SAE-C 14 Spline Continental Shaft

We are pleased to announce a new 2500 Series Continental Shaft; The SAE-C 14 spline shaft is very popular in the forestry machinery industry found on cutting heads and other heavy duty shaft requirement applications where high vibrations and extreme shaft loads are experienced. The special application shaft consist of a lock nut and washer to set bearing pre-loads and requires special machining to the shaft end cover. Because this is a special application product, minimum purchase quantities may apply; consult factory for availability, shaft end cover options and component coding assistance. See below for dimensions and component requirements.

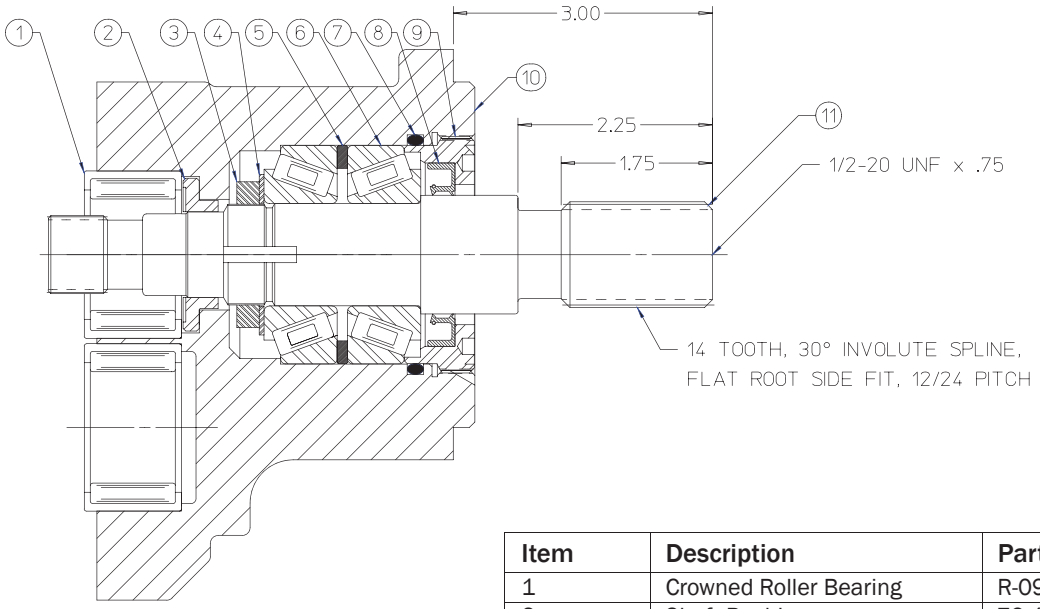

	Item	Description	Part #	Qty
	1	Crowned Roller Bearing	R-0921	2
	2	Shaft Bushing	ZQ-1909	1
	3	Locknut	900-01595	1
	4	Lockwasher	900-01596	1
	5	Bearing Spacer	FA-0558	1
	6	Tapered Bearing	W015-7	2
	7	O-Ring	K-2995-47	1
	8	Pump Shaft Seal Motor Shaft Seal	W62-26-10 W62-49-1	1
	9	Shaft Seal/Bearing Retainer	961-01594	1
*	10	SEC, Type III, 2 Bolt B Flange	574-01591	1
	11	Drive Shaft 1-1/4 Key	023-01593	1
	Not Shown	Check Valve Assembly, Motor Plug, Pump	L-0280-K S-0280	2 1
	Not Shown	Roll Pin	W004-19	1
	Not Shown	Pipe Plug	W0-17	1

* *Consult factory for additional shaft end cover flange types*

NFPA Solutions through motion technology

The Sensible Choice

2100 / 3000 / 3100 SERIES SHAFT SHEET

PART NUMBER	SHAFT DIAMETER	SHAFT LENGTH	APPROX. EXTEN.	SPLINE	KEY SIZE WIDTH X LENGTH	SAE TYPE	SHAFT CODE	REMARKS
023-00979	3/4"	4 41/64"	1 1/2"	11 TOOTH				CUMMINS DIESEL ACCESSORY DRIVE
024-00409-HF	1"	5 13/16"	2 13/16"		1/4" X 1 3/4"			
024-00740	7/8"	5 3/8"				B		TAPERED & THREADED 5/8"-18UNF
024-00835	5/8"	5 5/32"	2"		3/16" X 1 1/4"		85	HYDRECO REPL. OBSOLETE
BC-0024	1"	4 3/4"	1 5/8"	6 TOOTH			57	
BC-0024-3	1.100"	5 1/4"		6 TOOTH		B	57XL	LONGER SPLINE
C-810135	3/4"	4 53/64"	1 43/64"	11 TOOTH				**" DO NOT USE IN P197 SERIES "**
DC-0024	1"	5 3/64"	1 15/16"		1/4" X 1 1/4"		32	
ZG-0024	1 1/4"	5 19/64"	2 3/16"	14 TOOTH		C	6	
ZG-0024-HCL	1 1/4"	5 19/64"	2 3/16"	14 TOOTH		C		MADE WITH 4620 STEEL
ZH-0024	5/8"	4 29/64"	1 1/4"	9 TOOTH		A	84	
ZI-0024	7/8"	4 47/64"	1 5/8"	13 TOOTH		B	14	
ZI-0024-XLT	7/8"	4 15/16"	1 13/16"	13 TOOTH		B	14XL	OBSOLETE VENDORED
ZJ-0024	7/8"	4 45/64"	1 5/8"		1/4" x 1"	B	29	
ZJ-0024-XL	7/8"	5 57/64"	2 3/4"		1/4" x 1 3/4"	B	29XL	EXTRA LONG, USE KEY W09-01
ZM-0024-1	5 8"	4 61/64"			WDRF KEY	B	02	KEY & THREADED END 1/2"-20UNF
ZP-0024	7/8"	5 25/64"	2 1/4"		WDRF KEY		21	TAPERED W/INT THREAD 5/16-24
ZQ-0024	1 1/4"	5 19/64"	2 3/16"		5/16" X 1 1/2"		00	
ZT-0024	1"	4 15/16"	1 13/16"	15 TOOTH		BB	87	
ZU-0024	3/4"	5 1/2"	2 3/8"		3/16" X 1 3/4"		24	
ZW-0024	7/8"	5 5/8"	2 17/32"		1/4" X 7/8"	B	04/89	KEYED & THREADED END 5/8"-18UNF
ZW-0024-SPL	7/8"	5 7/8"	2 7/8"		1/4" X 7/8"	B		KEYED & THREADED END 5/8"-18UNF

ZE-0022		03	3000/3000 PIGGYBACK SHAFT
ZC-0022		11	5000/3000 PIGGYBACK SHAFT
ZG-0022		12	7500/3000 PIGGYBACK SHAFT

YZ-0022		CONNECTING SHAFT FOR TANDEMS

3700 SERIES SHAFT SHEET

PART NUMBER	SHAFT DIAMETER	SHAFT LENGTH	APPROX. EXTEN.	SPLINE	KEY SIZE WIDTH X LENGTH	SAE TYPE	SHAFT CODE	REMARKS
AW-0023	1 1/4"	6 13/16"	2 3/16"	14 TOOTH		C	6	TYPE I
AW-0023-XL	1 1/4"	7 11/16"	3 1/16"	14 TOOTH			88	OBSOLETE
BC-0023	1 1/8"	7"	2 3/8"		1/4" X 1 3/4"		1	
BD-0023	1.10"	7 1/16"	2 7/16"	6 TOOTH			2	TYPE I
BG-0023	1 1/4"	7"	2 3/8"		1/4" X 1 3/4"		7	TYPE I
BI-0023-TP	1 1/4"	6 13/16"	2 3/16"		5/16" X 1 1/2"			OBSOLETE
BJ-0023	1"	6 23/32"	2 1/8"		1/4" X 1 1/4"		19	OBSOLETE
BK-0023	7/8"	6 1/4"	1 5/8"	13 TOOTH			14	TYPE I
BM-0023	1 1/4"	7 3/4"	3 3/32"		5/16" X 1 1/2"		16	THREAED END 1"-14
CC-0023	1 1/4"	6 13/16"	2 3/16"		5/16" X 1 1/2"		00	TYPE I
CE-0023	1 1/4"	7 7/16"	2 3/4"	6 TOOTH			20	
CF-0023	1 1/8"	6 3/4"	2 1/8"	6 TOOTH			09	SAME AS BE-0023, CODE 05
CM-0023	1 1/16"	7 3/8"	2 11/16"				3	THREADED END, OBSOLETE
CX-0023-1	1 1/4"	8 3/4"	2 1/4"				62	USE KEY W09-55
DF-0023	1 1/4"	6 9/16"	2 1/8"	14 TOOTH			64	OBSOLETE

RZ-0022		CONNECTING SHAFT FOR TANDEMS

5000 / 5100 / 5151 SERIES SHAFT SHEET

PART NUMBER	SHAFT DIAMETER	SHAFT LENGTH	APPROX. EXTEN.	SPLINE	KEY SIZE WIDTH X LENGTH	SAE TYPE	SHAFT CODE	REMARKS
ZA-0024	1 1/8"	5 37/64"	2 3/8"		1/4" X 1 1/2"		1	
ZC-0024	7/8"	4 11/16"	1 5/8"	13 TOOTH		B	14	
ZD-0024	1"	5 9/64"	1 15/16"		1/4" X 1 1/4"		32	
ZD-0024-XL	1"	5 57/64"	2 11/16"		1/4" X 1 1/4"		32XL	
ZD-0024M	1"	5 9/64"	1 15/16"		1/4" X 1 1/4"			TAPPED METRIC, OBSOLETE
ZE-0024	1 1/4"	5 25/64"	2 3/16"		5/16" X 1 1/2"	C	00	
ZF-0024	1 1/4"	5 21/64"	2 3/16"	14 TOOTH		C	6	
ZL-0024	1.10"	5 41/64"	2 7/16"	6 TOOTH				
ZS-0024-1	1"	5 9/64"	1 15/16"	15 TOOTH		BB	87	
ZX-0024	7/8"	5 9/64"	1 15/16"		1/4" X 3/4"	B	29	EXTRA LONG
024-00501	1"	6"	2 15/16"		1/4" X 1 3/4"	BB		TYPE I
024-00939	55/64"	5 13/32"	2 11/32"	13 TOOTH				USE WITH CESSNA PTO **Special order**
202-0499-502	1 1/4"		3 1/8"		5/16" X 2 1/4"		62	TYPE I MINING INDUSTRY SHAFT

ZF-0022		11	5000/5000 PIGGYBACK SHAFT
ZI-0022		12	7500/5000 PIGGYBACK SHAFT

XZ-0022		CONNECTING SHAFT FOR TANDEMS

Hydraulic/Pneumatic Products

1500 Frost Road - Post Office Box 2068 - Streetsboro, Ohio 44241-0869 - (330)626-2801 - Fax: (330)626-2805

TO: ALL PERMCO DISTRIBUTORS **OCTOBER 19, 2009**

Subject: 5000/5100/5151 Series Code 62, 1-1/4" Keyed Continental Shaft

We are pleased to announce a new 5000/5100/5151 Series Continential Shaft. The code 62 shaft is a 1-1/4" diameter keyed shaft with internal threaded end; you will find this shaft is very popular in the coal machinery industry found on continuous miners and other heavy duty shaft requirement applications. See below for dimensions and component requirements.

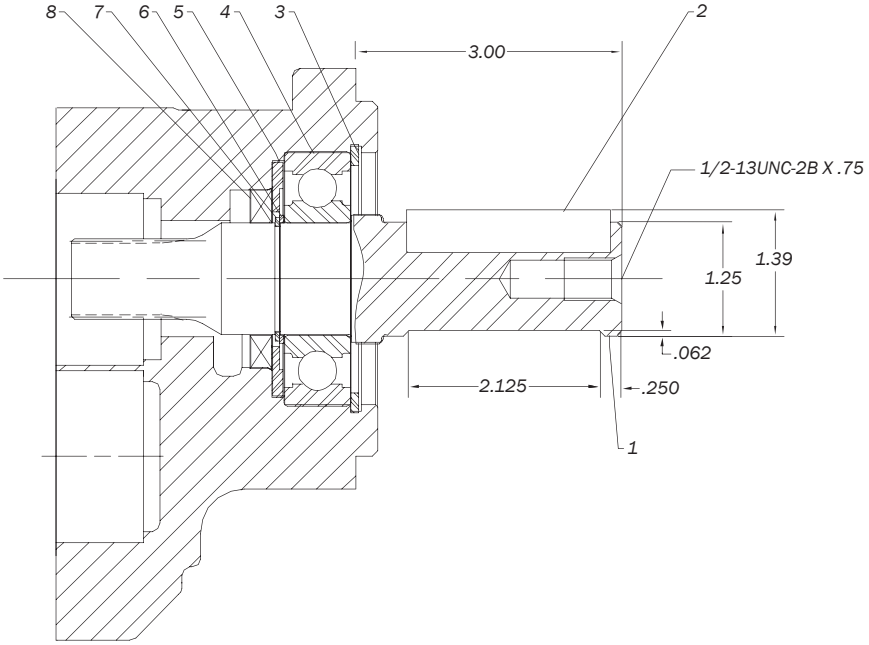

#		Part Number	Description	Qty
1		202-0499-502	Code 62, 1-1/4" Keyed Shaft	1
2		W09-44	Shaft Key 5/16 x 15/32 x 2-1/4	1
3		W023-283	Snap Ring	1
4		W58-47	Ball Bearing	1
5		ZB-0558	Seal Retainer	1
6		558-01017	Spacer	1
7		565-01016	Retainer Ring	1
8		226-01015	Shaft Seal Pump	1
9		280-1772-186	Shaft Seal Motor	1

NFPA
Solutions through motion technology

The Sensible Choice

7500 / 7600 SERIES SHAFT SHEET

PART NUMBER	SHAFT DIAMETER	SHAFT LENGTH	APPROX. EXTEN.	SPLINE	KEY SIZE WIDTH X LENGTH	SAE TYPE	SHAFT CODE	REMARKS
ZK-0024	1 1/4"	6 3/32"	2 3/16"		5/16"X 1 1/2"	C	00	SPECIAL
ZR-0024	1 1/4"	6 3/32"	2 3/16"	14 TOOTH		C	6	
ZR-0024-XL	1 1/4"	6 3/32"	3 1/16"	14 TOOTH		C	7	EXTRA LONG
ZR-0024-SHD	1 3/4"	6 27/32"	2 1/2"	13 TOOTH		D	8	
ZR-0024-SHD-XL	1 3/4"	7 27/32"	3 1/2"	13 TOOTH			09	EXTRA LONG

RZ-0022		CONNECTING SHAFT FOR TANDEMS

Hydraulic/Pneumatic Products

1500 Frost Road - Post Office Box 2068 - Streetsboro, Ohio 44241-0869 - (330)626-2801 - Fax: (330)626-2805

To: All Permco Distributors — October 19, 2009

Subject: PL Factors for Integral and Continential Shafts-Page 1

SERIES	CODE	DESCRIPTION	PL #
1500	1	SHAFT KEYED 7/8" DIA	C/F
1500	2	SHAFT 6 TOOTH 1" DIA	C/F
1500	7	SHAFT KEYED 7/8" DIA	C/F
1500	8	SHAFT 6 TOOTH 1" DIA	C/F
1500	00	SHAFT KEYED 1" DIA	C/F
1500	02	5/8" DIA W/THD END SAE A	C/F
1500	03	SHAFT KEYED 5/8" DIA	C/F
1500	04	7/8" DIA W/THD END SAE B	C/F
1500	05	SHAFT 13 TOOTH 7/8" DIA	C/F
1500	06	SHAFT KEYED 3/4" DIA	C/F
1500	07	SHAFT KEYED 1" DIA	C/F
1500	08	SHAFT 14 TOOTH SAE C	C/F
1500	11	63/64" DIA KEYED	C/F
1500	12	1" DIA 6 TOOTH	C/F
1500	14	SHAFT KEYED 1-1/4" DIA	C/F
1500	17	7/8" DIA 13 TOOTH	C/F
1500	19	SHAFT KEYED 3/4" DIA	C/F
1500	20	SHAFT KEYED 7/8" DIA	C/F
1500	21	SHAFT KEYED 3/4" DIA	C/F
1500	26	SHAFT KEYED 7/8" DIA	C/F
1500	85	SHAFT 9 TOOTH 5/8 DIA	C/F
2500	1	SHAFT KEYED 1-1/8" DIA	6600
2500	2	SHAFT 6 TOOTH 1-7/64" DIA	C/F
2500	5	TYPE I 6 TOOTH PTO/ALT	8000
2500	6	TYPE I 14 TOOTH SAE C	8000
2500	8	TYPE I KEYED	C/F
2500	9	TYPE I TAPERED KEYED	C/F
2500	00	SHAFT KEYED 1-1/4" DIA	8000
2500	08	TYPE 1 6 TOOTH 1-1/8" DIA	C/F
2500	14	SHAFT 13 TOOTH 7/8" DIA	6400
2500	15	SHAFT KEYED 7/8" DIA	C/F
2500	16	TYPE I SPECIAL	C/F
2500	18	SPECIAL	C/F
2500	19	SPECIAL	C/F
2500	27	SHAFT KEYED 7/8" DIA	4400
2500	28	SHAFT KEYED 7/8" DIA	C/F
2500	29	SHAFT KEYED 7/8" DIA	4400
2500	31	SHAFT 6 TOOTH 63/63" DIA	C/F
2500	32	SHAFT KEYED 1" DIA	6600
2500	33	SHAFT 6 TOOTH 7/8" DIA	C/F
2500	34	TYPE II KEYED	C/F
2500	35	6 TOOTH 63/64" DIA TYPE II	C/F

SERIES	CODE	DESCRIPTION	PL #
2500	36	1" DIA KEYED TYPE II	C/F
2500	37	7/8" DIA 13 TOOTH TYPE II	C/F
2500	38	SPECIAL	C/F
2500	39	6 TOOTH 7/8" DIA	C/F
2500	40	SPECIAL	C/F
2500	41	TYPE I KEYED	C/F
2500	42	SHAFT 14 TOOTH 1-1/4" DIA	C/F
2500	47	TYPE II KEYED	C/F
2500	49	TYPE I KEYED	C/F
2500	50	TYPE II KEYED	C/F
2500	59	TYPE III	C/F
2500	62	SHAFT KEYED 1-1/4" DIA	8000
2500	69	KEYED 63/64" DIA TYPE II	C/F
2500	71	6 TOOTH 1-1/8" DIA TYPE III	C/F
2500	72	TYPE III KEYED	C/F
2500	73	TYPE III KEYED	C/F
2500	77	TYPE III USE CODE 62	C/F
2500	83	SHAFT 6 TOOTH 1" DIA	C/F
2500	88	6 TOOTH PTO TYPE II	C/F
3700	1	SHAFT KEYED 1-1/8" DIA	C/F
3700	2	SHAFT 6 TOOTH 1-1/8" DIA	C/F
3700	3	SHAFT 1-1/16" DIA	C/F
3700	5	TYPE I 6 TOOTH PTO/ALT	C/F
3700	6	SHAFT 14 TOOTH 1-1/4" DIA	C/F
3700	7	SHAFT KEYED 1-1/4" DIA	C/F
3700	8	TYPE I KEYED	C/F
3700	00	SHAFT KEYED 1-1/4" DIA	C/F
3700	09	SHAFT 6 TOOTH 1-1/8" DIA	C/F
3700	14	SHAFT 13 TOOTH 7/8" DIA	C/F
3700	16	SHAFT 1-1/4" DIA	C/F
3700	19	SHAFT KEYED .984 DIA	C/F
3700	20	SHAFT 6 TOOTH 1-1/4" DIA	C/F
3700	22	SHAFT TYPE I KEYED	C/F
3700	26	TYPE I 8 TOOTH PTO	C/F
3700	30	SPECIAL	C/F
3700	43	SPECIAL	C/F
3700	61	SPECIAL	C/F
3700	62	SHAFT KEYED 1-1/4" DIA	C/F
3700	63	SPECIAL	C/F
3700	64	SHAFT 14 TOOTH 1-1/4" DIA	C/F
3700	66	SPECIAL	C/F
3700	67	SPECIAL	C/F

Hydraulic/Pneumatic Products

1500 Frost Road - Post Office Box 2068 - Streetsboro, Ohio 44241-0869 - (330)626-2801 - Fax: (330)626-2805

To: All Permco Distributors — October 19, 2009

Subject: PL Factors for Integral and Continential Shafts-Continued-Page 2

SERIES	CODE	DESCRIPTION	PL #
3700	68	TYPE III SPECIAL KEYED	C/F
3700	70	SPECIAL	C/F
3700	73	TYPE III KEYED	C/F
3700	74	TYPE I 14 TOOTH	C/F
3700	75	TYPE I KEYED/ALT USE CODE 1	C/F
3700	77	SPECIAL	C/F
3700	78	SPECIAL	C/F
3700	80	TYPE III KEYED	C/F
3700	81	SPECIAL	C/F
3700	86	SPECIAL	C/F
3700	88	TYPE I 14 TOOTH MT SPLINE C	C/F
2100	-1	CONNECTING SHAFT	5500
2100	C00	TYPE I 1-1/4" DIA KEYED SAE C	5500
2100	C02	5/8" DIA WDRF KEY	2700
2100	C04/89	7/8" DIA KEYED W/THD END	5500
2100	C6	TYPE I 14 TOOTH SAE C	5500
2100	14	TYPE I 13 TOOTH SAE B	8300
2100	C14	TYPE I 13 TOOTH SAE B	5500
2100	C14XL	TYPE I 13 TOOTH SAE B X-LONG	5500
2100	C21	7/8" DIA WDRF KEY W/INT TRD	5500
2100	22	FISH PUMP 1" KEYED	C/F
2100	C24	TYPE I 3/4" DIA KEYED	5500
2100	29	TYPE I KEYED SAE B	5700
2100	C29	TYPE I KEYED SAE B	5500
2100	C29XL	TYPE I KEYED SAE B X-LONG	5500
2100	32	TYPE I KEYED 1" DIA	8600
2100	C32	TYPE I KEYED 1" DIA	5500
2100	54	TYPE II B SPLINE	8300
2100	55	TYPE I 7/8" DIA KEYED	5700
2100	56	TYPE II BB KEYED	8600
2100	57	TYPE I 6 TOOTH 1" DIA	C/F
2100	C57	TYPE I 6 TOOTH 1" DIA	5500
2100	C57XL	TYPE I 6 TOOTH 1" DIA X-LONG	5500
2100	84	TYPE I 9 TOOTH SAE A	2700
2100	C84	TYPE I 9 TOOTH SAE A	2700
2100	87	TYPE I 15 TOOTH SAE BB	10000
2100	C87	TYPE I 15 TOOTH SAE BB	5500
2100	89	KEYED W/THRD END	C/F
3000	-1	CONNECTING SHAFT	5500
3000	C00	TYPE I 1-1/4" DIA KEYED SAE C	5500
3000	C02	5/8" DIA WDRF KEY	2700
3000	03	3000/3000 PB C/S	5500
3000	C04/89	7/8" DIA KEYED W/THD END	5500
3000	C6	TYPE I 14 TOOTH SAE C	5500
3000	11	5000/3000 PB C/S	5500
3000	12	7500/3000 PB C/S	5500
3000	14	TYPE I 13 TOOTH SAE B	8300
3000	C14	TYPE I 13 TOOTH SAE B	5500
3000	C14XL	TYPE I 13 TOOTH SAE B X-LONG	5500
3000	C21	7/8" DIA WDRF KEY W/INT TRD	5500
3000	22	FISH PUMP 1" KEYED	C/F
3000	C24	TYPE I 3/4" DIA KEYED	5500
3000	29	TYPE I KEYED SAE B	5700
3000	C29	TYPE I KEYED SAE B	5500
3000	C29XL	TYPE I KEYED SAE B X-LONG	5500
3000	32	TYPE I KEYED 1" DIA	8600
3000	C32	TYPE I KEYED 1" DIA	5500
3000	54	TYPE II B SPLINE	8300
3000	55	TYPE I 7/8" DIA KEYED	5700
3000	56	TYPE II BB KEYED	8600
3000	57	TYPE I 6 TOOTH 1" DIA	C/F
3000	C57	TYPE I 6 TOOTH 1" DIA	5500
3000	C57XL	TYPE I 6 TOOTH 1" DIA X-LONG	5500
3000	84	TYPE I 9 TOOTH SAE A	2700
3000	C84	TYPE I 9 TOOTH SAE A	2700
3000	87	TYPE I 15 TOTH SAE BB	10000
3000	C87	TYPE I 15 TOOTH SAE BB	5500
3000	89	KEYED W/THRD END	C/F
3100	-1	CONNECTING SHAFT	5500
3100	C00	TYPE I 1-1/4" DIA KEYED SAE C	5500
3100	C02	5/8" DIA WDRF KEY	2700
3100	03	3100/3100 PB C/S	5500
3100	C04/89	7/8" DIA KEYED W/THD END	5500
3100	C6	TYPE I 14 TOOTH SAE C	5500
3100	11	5100/3100 PB C/S	5500
3100	12	7600/3100 PB C/S	5500
3100	14	TYPE I 13 TOOTH SAE B	8300
3100	C14	TYPE I 13 TOOTH SAE B	5500
3100	C14XL	TYPE I 13 TOOTH SAE B X-LONG	5500
3100	C21	7/8" DIA WDRF KEY W/INT TRD	5500
3100	22	FISH PUMP 1" KEYED	C/F
3100	C24	TYPE I 3/4" DIA KEYED	5500
3100	29	TYPE I 7/8" DIA KEYED SAE B	5700

Hydraulic/Pneumatic Products

1500 Frost Road - Post Office Box 2068 - Streetsboro, Ohio 44241-0869 - (330)626-2801 - Fax: (330)626-2805

To: All Permco Distributors — October 19. 2009

Subject: PL Factors for Integral and Continential Shafts-Continued-Page 3

SERIES	CODE	DESCRIPTION	PL #
3100	C29	TYPE I KEYED SAE B	5500
3100	C29XL	TYPE I KEYED SAE B X-LONG	5500
3100	32	TYPE I KEYED 1” DIA	8600
3100	C32	TYPE I KEYED 1” DIA	5500
3100	54	TYPE II B SPLINE	8300
3100	55	TYPE I 7/8” DIA KEYED	5700
3100	56	TYPE II BB KEYED	8600
3100	57	TYPE I 6 TOOTH 1” DIA	C/F
3100	C57	TYPE I 6 TOOTH 1” DIA	5500
3100	C57XL	TYPE I 6 TOOTH 1” DIA X-LONG	5500
3100	84	TYPE I 9 TOOTH 5/8” DIA	2700
3100	C84	TYPE I 9 TOOTH 5/8” DIA	2700
3100	87	TYPE I 15 TOOTH SAE BB	10000
3100	C87	TYPE I 15 TOOTH SAE BB	5500
3100	89	KEYED W/THRD END	C/F
5000	-1	CONNECTING SHAFT	8000
5000	C1	TYPE I 1-1/8” DIA KEYED	8000
5000	6	TYPE I 14 TOOTH SAE C	13850
5000	C6	TYPE I 14 TOOTH SAE C	8000
5000	00	TYPE I 1-1/4” DIA KEYED SAE C	13000
5000	C00	TYPE I 1-1/4” DIA KEYED SAE C	8000
5000	11	5000/5000 PB C/S	8000
5000	12	7500/5000 PB C/S	8000
5000	14	TYPE I 13 TOOTH SAE B	6400
5000	C14	TYPE I 13 TOOTH SAE B	6400
5000	32	TYPE I 1” DIA KEYED	6600
5000	C32	TYPE I 1” DIA KEYED	6600
5000	C32XL	TYPE I 1” DIA KEYED X-LONG	6600
5000	42	TYPE II 14 TOOTH SAE C	13850
5000	54	TYPE II 13 TOOTH SAE B	6400
5000	62	TYPE I 1-1/4” KEYED X-LONG	C/F
5000	87	TYPE I 15 TOOTH SAE BB	10000
5000	C87	TYPE I 15 TOOTH SAE BB	8000
5000	SPL	TYPE I 1” DIA KEYED SAE BB	8000
5000	SPL	TYPE 1.1” DIA 6 TOOTH	8000
5000	SPL	TYPE I 55/64” DIA 13 TOOTH	6400
5100	-1	CONNECTING SHAFT	8000
5100	C1	TYPE I 1-1/8” DIA KEYED	8000
5100	6	TYPE I 14 TOOTH SAE C	13850
5100	C6	TYPE I 14 TOOTH SAE C	8000
5100	00	TYPE 1 1-1/4” DIA KEYED SAE C	13000

SERIES	CODE	DESCRIPTION	PL #
5100	C00	TYPE I 1-1/4” DIA KEYED SAE C	8000
5100	11	5100/5100 PB C/S	8000
5100	12	7600/5100 PB C/S	8000
5100	14	TYPE I 13 TOOTH SAE B	6400
5100	C14	TYPE I 13 TOOTH SAE B	6400
5100	32	TYPE I 1” DIA KEYED	6600
5100	C32	TYPE I 1” DIA KEYED	6600
5100	C32XL	TYPE I 1” DIA KEYED X-LONG	6600
5100	42	TYPE II 14 TOOTH SAE C	13850
5100	54	TYPE II 13 TOOTH SAE B	6400
5100	62	TYPE I 1-1/4” DIA KEYED X-LONG	C/F
5100	87	TYPE I 15 TOOTH SAE BB	10000
5100	C87	TYPE I 15 TOOTH SAE BB	8000
5100	SPL	TYPE I 1” DIA KEYED SAE BB	8000
5100	SPL	TYPE I 1.1: DIA 6 TOOTH	8000
5100	SPL	TYPE I 55/64” DIA 13 TOOTH	6400
7500	-1	CONNECTING SHAFT	10000
7500	00	TYPE I 1-1/4” DIA KEYED SAE C	8300
7500	C00	TYPE I 1-1/4” DIA KEYED SAE C	8300
7500	C09	13 TOOTH SAE D EXTRA LONG	10000
7500	6	TYPE I 14 TOOTH SAE C	12000
7500	C6	TYPE I 14 TOOTH SAE C	8300
7500	C7	TYPE 1 14 TOOTH SAE C X-LONG	8300
7500	C8	TYPE I 13 TOOTH SAE D	8300
7600	-1	CONNECTING SHAFT	10000
7600	00	TYPE I 1-1/4” DIA KEYED SAE C	8300
7600	C00	TYPE I 1-1/4” DIA KEYED SAE C	8300
7600	C09	13 TOOTH SAE D EXTRA LONG	10000
7600	6	TYPE I 14 TOOTH SAE C	12000
7600	C6	TYPE I 14 TOOTH SAE C	8300
7600	C7	TYPE 1 14 TOOTH SAE C X-LONG	8300
7600	C8	TYPE I 13 TOOTH SAE D	8300
124	-1	CONNECTING SHAFT	4500
124	24	TYPE II 3/4” DIA KEYED 2.31 EXT	C/F
124	45	TYPE II TAPERED CLUTCH 2.28 EXT	C/F
124	54	TYPE II 13 TOOTH SAE B	13200
124	55	TYPE II 7/8” DIA KEYED SAE B	9100
124	55XL	TYPE II 7/8 DIA KEYED 2.8 EXT	9100
124	75	EURO TAPER W/M12X15 EXT. TRD	C/F
124	85	TYPE II 9 TOOTH SAE A	4400

Hydraulic/Pneumatic Products

1500 Frost Road - Post Office Box 2068 - Streetsboro, Ohio 44241-0869 - (330)626-2801 - Fax: (330)626-2805

To: All Permco Distributors — October 19, 2009

Subject: PL Factors for Integral and Continential Shafts-Continued-Page 4

SERIES	CODE	DESCRIPTION	PL #
124	86	TYPE II 5/8" DIA KEYED SAE A	3400
124	86XL	TYPE II 5/8" DIA KEYED X-LONG	3400
124	99	TAPERED CLUTCH 1.9 EXT 3/8" BRK	C/F
197	-1	CONNECTING SHAFT	6000
197	C6	TYPE I 14 TOOTH SAE C	6000
197	C00	TYPE I 1-1/4" DIA KEYED SAE C	6000
197	C04	TYPE I 7/8" DIA KEYED	C/F
197	C14	TYPE I 13 TOOTH SAE B	6000
197	C19	11 TOOTH 1.49 EXT	6000
197	C20	TAPERED W/THRDS	6000
197	C21	TAPERED SHAFT W/THRD END	C/F
197	C24	TYPE I 3/4" DIA KEYED	C/F
197	C29	TYPE I 7/8" DIA KEYED SAE B	6000
197	C29XL	TYPE I 7/8" DIA KEYED X-LONG	6000
197	C32	TYPE I 1" DIA KEYED SAE BB	6000
197	C57	TYPE I 1" DIA 6 TOOTH	6000
197	C84	TYPE I 5/8" DIA 9 TOOTH SAE A	2700
197	C87	TYPE I 15 TOOTH SAE BB	6000
197	CM1	25MM STR KEYED	C/F
197	14	TYPE I 13 TOOTH SAE B	8000
197	29	TYPE I 7/8" DIA KEYED SAE B	6500
197	32	TYPE I 1" DIA KEYED SAE BB	8000
197	48	EURO TAPER W/M14X1.5 EXT TRD	C/F
197	87	TYPE I 15 TOOTH SAE BB	10000
257	-1	CONNECTING SHAFT	8000
257	C6	TYPE I 14 TOOTH SAE C	8000
257	C00	TYPE I 1-1/4" DIA KEYED SAE C	8000
257	C14	TYPE I 13 TOOTH SAE B	6500
257	C32	TYPE I 1" DIA KEYED SAE BB	6500
257	C62	TYPE I 1-1/4" DIA KEYED	C/F
257	C87	TYPE I 15 TOOTH SAE BB	8000
257	C2	TYPE I 1.1" DIA 6 TOOTH	C/F
257	6	TYPE I 14 TOOTH SAE C	16000
257	00	TYPE I 1-1/4" DIA KEYED SAE C	14000
257	14	TYPE I 13 TOOTH SAE B	6500
257	87	TYPE I 15 TOOTH SAE BB	10000
257	SPL	TYPE I 17 TOOTH	C/F
360	-1	CONNECTING SHAFT	11000
360	00	TYPE I 1-1/4" DIA KEYED SAE C	9300
360	6	TYPE I 14 TOOTH SAE C	13500
360	14	TYPE I 13 TOOTH SAE B	C/F
360	87	TYPE I 15 TOOTH SAE BB	7000

C/F = CONSULT FACTORY

PERMCO SPIN-ON HYDRAULIC FILTERS

Part Number Cross Reference

Company	Competitor's Part #	Permco Part #
AC Delco	PF-1033	70124
	PF-1091	70239
	PF-1097	**70171**
	PF-1120	70113
	PF-16	**70134**
	PF-2000	70196
	PF-2004	70195
	PF-2010	**70157**
	PF-2021	**70157**
	PF-2023	**70158**
	PF-2036	70206
	PF-26	**70135**
	PF-923	70123
	PF-924	70101
	PF-925	70102
	PF-941	**70157**
Baldwin	B-378	70113
	B-378-10	70112
	BT-260	70124
	BT-260-10	70123
	BT-287-10	**70157**
	BT-351	70239
	BT-365	70146
	BT-366-10	70184
	BT-371-10	70195
	BT-372-10	70206
	BT-387	**70158**
	BT-387-10	**70157**
	BT-388	**70172***
	BT-388-10	**70171***
	BT-428	70206
	BT-526	70102
	BT-526-10	70101
	BT-839	**70135**
	BT-839-10	**70134**
Can-Flo	**CF-50-E-10**	**70157**
	RSE-30-10	**70134**
	RSE-30-10N	**70134**
	RSE-30-25	**70135**
	RSE-30-25N	**70135**
	RSE-50-10N	**70157**
	RSE-50-25N	**70158**
	RSE-50-3	70159
	FISE50-3N	70159
	RSE50-51-25	**70158**
	RSE55-10	70239

Company	Competitor's Part #	Permco Part #
Cessna	601876	70124
	6200-AF	70123
	62200-AF	70123
	62200-G2	70124
	D-114955	70124
Char-Lynn	5604	70102
	5610	70101
Crosland	7501	70184
	7502	70239
	7515	**70158**
Cross	**IA-9021**	**70134**
	IA-9023	**70135**
	IA-9251	**70172***
	IA-9253	**70171***
	S-28	**70134**
	S-29	**70135**
	S-58	**70157**
	S-59	**70158**
DMIC	**DMS04AN**	**70134**
	DMS04BN	**70135**
	DMS04CN	70136
	DMS05AN	70184
	DMS05BN	70185
	DMS05CN	70186
	DMS07CN	70149
	DMS10AN	70239
	DMS10BN	70240
	DMS10CN	70241
	DMS11AN	**70157**
	DMS11BN	**70158**
	DMS11CN	70159
	DMS16DN	70174
	DMS16EN	70176
Diagnetics	BF110	70137
	DF110	**70134**
	DF125	**70135**
	BF210	70149
	BF303	70176
	BF310	70174
	DF310	**70171**
	DF325	**70172**
	DF710	**70157**
	DF725	**70158**

Company	Competitor's Part #	Permco Part #
Donaldson	**P15-1553**	**70135**
	P16-1267	70101
	P162358	70102
	P16-2766	70102
	P16-4348	70101
	P16-4351	70112
	P16-4352	70113
	P16-4360	70112
	P16-5762	70179
	P16-5875	**70163**
	P16-5876	70178
	P16-5877	70162
	P16-5879	**70158**
	P16-5880	**70172**
	P16-6264	**70157**
	P16-6445	70112
	P16-6860	70326
	P16-7829	70202
	P16-7830	70200
	P16-9392	70213
	P16-9393	70211
	P16-9538	70322
	P55-0288	**70157**
	P55-0388	**70157**
	P55-1551	**70134**
	P55-6001	70123
	P55-6005	70123
Filter Products	**FPE10-32**	**70157**
	FPE30-03G	70141
	FPE30-100M	70145
	FPE30-10B	**70134**
	FPE30-10G	70140
	FPE30-10N	**70134**
	FPE30-10-W	70137
	FPE30-25B	**70135**
	FPE30-25N	**70135**
	FPE30-25WG	70142
	FPE30-3	70136
	FPE35-10N	70184
	FPE50-03G	70164
	FPE50-05G	70164
	FPE50-100M	70168
	FPE50-10G	**70163**
	FPE50-10N	**70157**
	FPE50-10W	70160
	FPE50-20G	70162
	FPE50-25N	**70158**

Bold type represents stock items; all others are available as special orders

*** = Length of filter is 2" longer**

PERMCO SPIN-ON HYDRAULIC FILTERS

Part Number Cross Reference

Company	Competitor's Part #	Permco Part #
Filter Products (Cont'd)	FPE50-25W	70161
	FPE50-25WG	70165
	FPE50-3N	70159
	FPE55-10N	70239
	FPE70-03G	70179
	FPE70-03N	70173
	FPE70-05G	70179
	FPE70-100M	70183
	FPE70-10G	70178
	FPE70-10N	**70171**
	FPE70-10W	70174
	FPE70-20G	70177
	FPE70-25N	**70172**
	FPE70-25W	70175
	FPE70-25WG	70182
	FPF30-03G	70202
	FPF30-05G	70202
	FPF30-10G	70201
	FPF30-20G	70200
	FPF40-03G	70213
	FPF40-03N	70208
	FPF40-05G	70213
	FPF40-10G	70212
	FPF40-10N	70206
	FPF40-20G	70211
	FPF40-26N	70207
Fleetguard	HF6002	70102
	HF6003	70101
	HF6005	70123
	HF6056	**70134**
	HF6057	**70135**
	HF6068	70123
	HF6103	70206
	HF6121	**70134**
	HF6122	70146
	HF6125	**70158**
	HF6130	**70158**
	HF6133	**70157**
	HF6135	**70172***
	HF6136	**70171***
	HF6138	**70172**
	HF6157	**70157**
	HF6163	**70157**
	HF6167	**70158**
	HF6173	70184
	HF6177	70239
	HF6203	70123

Company	Competitor's Part #	Permco Part #
Fleetguard (Cont'd)	HF6204	70124
	HF6269	70112
	HF6500	70136
	HF6510	**70134**
	HF6511	70146
	HF6520	**70135**
	HF6521	70147
	HF6522	70145
	HF6600	70197
	HF6601	70208
	HF6603	70202
	HF6604	70213
	HF6606	70201
	HF6607	70212
	HF6610	70195
	HF6611	70206
	HF6612	70201
	HF6613	70212
	HF6620	70196
	HF6621	70207
	HF6625	70200
	HF6626	70211
	HF6630	70201
	HF6631	70212
	HF6633	70211
	HF6700	70159
	HF6701	**70172**
	HF6703	70164
	HF6704	70179
	HF6706	**70163**
	HF6707	70178
	HF6708	**70164**
	HF6710	**70157**
	HF6711	**70171**
	HF6712	**70163**
	HF6713	70178
	HF6720	**70158**
	HF6721	**70172**
	HF6722	70168
	HF6723	70183
	HF6725	70162
	HF6726	70177
	HF6730	**70163**
	HF6731	70178
	HF6732	70162
	HF6733	70177
	HF7955	70123
	HF7980	70245

Company	Competitor's Part #	Permco Part #
Fram	**P-1653**	**70134**
	P-1653-A	**70134**
	P-1654	**70135**
	P-1656	70123
	P-1657	70124
	P-3377	70101
	P-3398	70102
	P-3759	70195
	PH-3567	**70157**
Gresen	**1551**	**70134**
	1551-001	**70134**
	1553	**70135**
	1553-001	**70135**
	22615-001	**70171**
	7520-001	**70157**
	7521-001	**70158**
	7531-001	70159
	8058-001	**70158**
	F1 01	**70134**
	F1 03	**70135**
	FS251	**70157**
	FS252	**70158**
	K-22001	**70134**
	K-22006	**70134**
	K-23018	**70157**
	K-23019	**70158**
	K-23020	70159
	K-23041 A	**70157**
Hycon	MFE160-03/2	70159
	MFE160-10/2	**70157**
	MFE160-10-A/2	70160
	MFE160-25/2	**70158**
	MFE160/1-03/2	70173
	MFE160/1-10/2	**70171**
	MFE160-1-10A/2	70174
	MFE160/1-25/2	**70172**
	MFE80-10/2	**70134**
	MFE80-25/2BN	**70135**
	MFE90-010BN/2	70201
	MFE90-03BN/2	70202
	MFE90-05BM/2	70201
	MFE90-10	70195
	MFE90-20BN/2	70200
Lenz	**CP-752-10**	**70134**
	CP-752-30	**70135**

Bold type represents stock items; all others are available as special orders

*** = Length of filter is 2" longer**

PERMCO SPIN-ON HYDRAULIC FILTERS

Part Number Cross Reference

Company	Competitor's Part #	Permco Part #
Lenz (Cont'd)	CP-1002-10	70123
	CP-1252-10-55	70236
	CP-1252-55	70239
	CP-1282-55	**70157**
	CP-1282-10-56	**70157**
	CP-752-10	**70134**
	CP-752-30	**70135**
LHA	**SPE-15-10**	**70134**
	SPE-15-25	**70135**
	SPE-16-10	70184
	SPE-25-10	70146
	SPE-25-25	70147
	SPE-50-10	**70157**
	SPE-50-25	**70158**
	SPE-50-3A	70246
	SPE-50-3N	70159
	SPE-52-10	70239
	SPE-52-25	70240
	SPE-60-10	70171
	SPE-60-25	70172
	TTE-15-10	70569
	TTE-30-10	70600
Mahle	HC4	70239
	HC6	**70134**
MP Products	CSG-100-A03A	70164
	CSG-100-A06A	**70163**
	CSG-100-A10A	**70163**
	CSG-100-A25A	70162
	CSG-100-M125A	70168
	CSG-100-P05-A-N	70159
	CSG-100-P10-A-N	**70157**
	CSG-100-P25-A-N	**70158**
	CSG-150-A03A	70179
	CSG-150-A06A	70178
	CSG-150-A10A	70178
	CSG-150-A25A	70177
	CSG-150-M125A	70183
	CSG-150-P05-A	70173
	CSG-150-P10-A	**70171**
	CSG-150-P25-A	**70172**
	CSG-50-A03A	70141
	CSG-50-A10A	70140
	CSG-50-A25A	70139
	CSG-50-M125A	70145
	CSG-50-P05-A	70136

Company	Competitor's Part #	Permco Part #
MP Products (Cont'd)	CSG-50-P05-A-N	70136
	CSG-50-P10-A-N	**70134**
	CSG-50-P10A	**70134**
	CSG-50-P25-A-N	**70135**
	CSG-50-P25A	**70135**
	CSGW-100-P10-A	70160
	CSGW-100-P25-A	70161
	CSGW-150-A03A	70182
	CSGW-150-P03-S	70176
	CSGW-150-P10-A	70174
	CSGW-150-P25-A	70175
	CSGW-50-P10-A	70137
	CSGW-50-P25-A	70138
	CSGW-70-P10-A	70149
	CSGW-70-P25-A	70150
Pall	HC7400SDN8H	70212
	HC7400SDP8H	70213
	HC7400SDS8H	70212
	HC7400SDT8H	70211
	HC7400SUJ4H	70196
	HC7400SUJ8H	70207
	HC7400SUK4H	70195
	HC7400SUK8H	70206
	HC7400SUN4H	70201
	HC7400SUP4H	70202
	HC7400SUS4H	70201
	HC7400SUT4H	70200
	HC7400SUT8H	70211
	HC7500FDJ4H	**70158**
	HC7500SDJ8H	**70172**
	HC7500SDK4H	**70158**
	HC7500SDK8H	**70172**
	HC7500SDN4H	**70163**
	HC7500SDN8H	70178
	HC7500SDP4H	70164
	HC7500SDP4Z	70164
	HC7500SDS4H	**70163**
	HC7500SDS8H	70178
	HC7500SDT4H	70162
	HC7500SDT8H	70177
	HC7500SUH4H	**70158**
	HC7500SUH8H	**70172**
	HC7500SUJ4H	**70158**
	HC7500SUJ8H	**70172**
	HC7500SUK4H	**70157**
	HC7500SUK8H	**70171**
	HC7500SUN4H	**70163**

Company	Competitor's Part #	Permco Part #
Pall (Cont'd)	HC7500SUN8H	70178
	HC7500SUP4H	70164
	HC7500SUP4Z	70164
	HC7500SUP8H	70179
	HC7500SUS4H	**70163**
	HC7500SUS8H	70178
	HC7500SUT4H	70162
	HC7500SUT8H	70177
	HC9500FSUJH	**70158**
	HC9500FSUKY	**70157**
	HC9500SUH4H	**70158**
	HC9500SUH8H	**70172**
	HC9500SUJ4H	**70158**
	HC9500SUJ8H	**70172**
	HC9500SUK4H	**70157**
	HC9500SUK8H	**70171**
	HC9500SUN4H	**70163**
	HC9500SUN8H	70178
	HC9500SUP4H	70164
	HC9500SUP8H	70179
	HC9500SUS4H	**70163**
	HC9500SUS8H	70178
	HC9500SUT4H	70162
	HC9500SUT8H	70177
	HC9540SUH4H	70196
	HC9540SUJ4H	70196
	HC9540SUJ8H	70207
	HC9540SUK4H	70195
	HC9540SUN4H	70201
	HC9540SUP4H	70202
	HC9540SUS4H	70201
	HC9540SUT4H	70200
Parker	921166	70184
	921999	**70134**
	925023	**70135**
	925516	**70134**
	925947	**70135**
	926163	**70157**
	926164	**70158**
	926169	**70157**
	926170	**70158**
	926502	70239
	926540	70159
	926541	70159
	926542	70136
	926543	70136
	926544	**70158**

Bold type represents stock items; all others are available as special orders

*** = Length of filter is 2" longer**

PERMCO SPIN-ON HYDRAULIC FILTERS

Part Number Cross Reference

Company	Competitor's Part #	Permco Part #
Parker (Cont'd)	**927736**	**70171**
	932079	**70157**
	932443	**70163**
PTI (Textron)	F4E-030-BC-B	70136
	F4E-030-CC-B	**70134**
	F4E-030-DC-B	**70135**
	F4E-030-EC-B	70137
	F4E-030-FC-B	70138
	F4E-035-CC-B	70184
	F4E-040-BC-B	70148
	F4E-040-CC-B	70146
	F4E-040-DC-B	70147
	F4E-040-EC-B	70149
	F4E-040-FC-B	70150
	F4E-040-JC-B	70151
	F4E-050-BC-B	70159
	F4E-050-CC-B	**70157**
	F4E-050-DC-B	**70158**
	F4E-050-JC-B	70162
	F4E-055-CC-B	70239
	F4E-070-CC-B	70173
	F4E-070-CC-B	**70171**
	F4E-070-DC-B	**70172**
	F4E-070-EC-B	70174
	F4E-070-FC-B	70175
	F4E-070-JC-B	70177
	F4F-030-BC-B	70197
	F4F-030-CC-B	70195
	F4F-030-DC-B	70196
	F4F-030-GC-B	70202
	F4F-030-HC-B	70201
	F4F-030-JC-B	70200
	F4F-040-BC-B	70208
	F4F-040-CC-B	70206
	F4F-040-DC-B	70207
	F4F-040-GC-B	70213
	F4F-040-HC-B	70212
	F4F-040-JC-B	70211
UCC	UC-2408X4	70571
	UC-2418X4	70602
	UC-2439	70569
	UC-2449	70600
	UC-MX-1518-103	70184
	UC-MX-1518-104	70184
	UC-MX-1518-105	70184
	UC-MX-1518-106	70184

Company	Competitor's Part #	Permco Part #
UCC (Cont'd)	UC-MX-1591-103	70239
	UC-MX-1591-104	70239
	UC-MX-1591-105	70239
	UC-MX-1591-106	70239
Vickers	350577	70123
	573082	70123
	573083	70124
	575942	**70157**
	575943	**70158**
	575994	**70158**
	736474	**70171**
	736662	**70171**
	736693	**70171**
	736715	70123
	736820	**70158**
	736886	70124
	737337	**70157**
	737724	**70158**
	737815	**70158**
	737816	**70157**
	737817	**70158**
	926388	**70171**
	941190	**70158**
	941191	**70158**
Wix	51116	70206
	51196	**70135**
	51202	70208
	51203	70195
	51205	70196
	51259	**70135**
	51551	**70134**
	51553	**70135**
	51610	70101
	51611	70102
	51663	70123
	51712	70124
	51756	70159
	51759	**70157**
	51826	70112
Zinga	AE-3	70136
	AE-10	**70134**
	AE-100	70145
	AE-10AZ	70137
	AE-10L	70146
	AE-25	**70135**

Company	Competitor's Part #	Permco Part #
Zinga (Cont'd)	AE-25L	70147
	BE-10-18	70228
	DE-10	70102
	DE-10L	70112
	DE-25	70101
	DE-25L	70113
	GCE-3	70159
	GCE-10	**70157**
	GCE-25	**70158**
	GLE-3	70173
	HE-10	70195
	HE-10AZ	70198
	HE-10AZL	70209
	HE-10L	70206
	HE-3	70197
	HE-3L	70208
	HE-25	70196
	HE-25L	70207
	LE-10	**70171**
	LE-100	70183
	LE-10AZ	70174
	LE-25	**70172**
	LE-3	70173
	LE-3AZ	70176
	SE-10	**70157**
	SE-100	70168
	SE-25	**70158**
	SE-3	70159
	VE-10	70123

Bold type represents stock items; all others are available as special orders

*** = Length of filter is 2" longer**

Hydraulic/Pneumatic Products

1500 Frost Road - Post Office Box 2068 - Streetsboro, Ohio 44241-0869 - (330)626-2801 - Fax: (330)626-2805

To: All Permco Distributors ***February 23, 2007***

Subject: 3000/3100 and 5000/5100 2-Speed Motors

Permco's Two-Speed motors have the two-speed valve built into the bearing carrier providing compact packaging and offering lower system cost by eliminating expensive external components. The two-speed valve can be shifted on the fly to either low speed/high torque or high speed/low torque modes.

Two-Speed motors are ideal for winch, crawler, conveyer, auger and many other types of applications with low speed/high torque and high speed/low torque requirements. In winch or over hung load applications a counterbalance valve should be included in the hydraulic circuit; the counterbalance valve can be mounted directly to the bearing carrier outlet port if needed. It should be noted that two-speed motors should not be used in applications where counterbalancing in both directions is required.

Two-speed motors can be constructed with our ten-tooth count standard motor (M) gears or our thirteen-tooth count winch motor (W) gears depending on the application. In low speed/high torque applications (below 400 RPM) it is best to utilize the thirteen-tooth winch motor (W) gears; this will provide improved starting torque, smoother low speed operation and lower torque ripple.

Typical starting torque is up to 80%+ of theoretical in the low speed mode utilizing winch motor (W) gears.
Typical running torque is 28 in-lbs per 1" of gear per 100 PSI for the M3000/3100 and W3000/3100 series (2.00 CID per 1" gear) and 36 in-lbs per 1" of gear per 100 PSI for the M5000/5100 and W5000/5100 series (2.57 CID per 1" gear). Operating pressures range up to 3000 PSI dependent on gear size and configuration. Refer to Permco's Engineer's Handbook for available gear sizes and maximum operating pressures. Case drain required in most applications with less than 100 PSI backpressure; consult factory.

Note: When ordering please specify right hand (CW) or left hand (CCW) orientation, low or high speed start-up, operating RPM's and pressures for high and low speed modes. Refer to 2-Speed Motor bulletin # 06-TS100A and the Permco website (*www.permco.com)* under the PDF downloadable tab for more information.

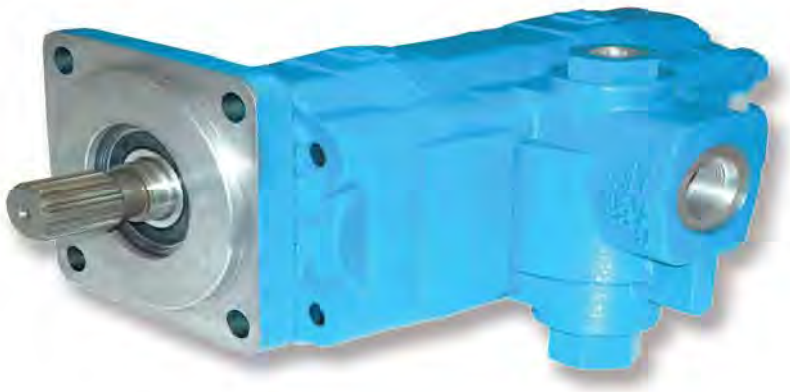

NFPA
Solutions through motion technology

The Sensible Choice

Reference Sheet for Available Winch Motor Gears

W3000/3100			10	12	13	15	17	20	22	25	27	30
996-00981-XX	Continental	Gear Set	X	X		X		X				
024-00980-XX	SAE-B-Spline Code 14	Single Gear Set	X				X	X				
W5000/5100												
996-00873-XX	Continental	Gear Set	X	X		X	X	X	X	X		
024-00872-XX	SAE-B-Spline Code 14	Single Gear Set					X	X	X	X		
024-00883-XX	SAE-C-Spline Code 6	Single Gear Set		X			X	X	X	X		
024-00974-XX	SAE-C-Spline Code 6	Tandem Gear Set	X	X		X	X	X	X	X		
W7500/7600												
996-00897-XX	Continental	Gear Set					X	X				X
024-00896-XX	SAE-C-Spline Code 6	Single Gear Set					X	X	X	X	X	X

X = Parts in stock and available for sale: call for additional gear sizes and lead times

	W3000/3100	
ZZ-0947-DV	Thrust Plate	2/per gear set
KA-0558-1XS	Ring Seal	2/per gear set

	W5000/5100	
X-0947-DV	Thrust Plate	2/per gear set
MA-0558-1XS	Ring Seal	2/per gear set

	W7500/7600	
AZ-0947-W	Thrust Plate	2/per gear set
280-1774-939	T Plate Seal	4/per gear set
VA-0558-1XS	Ring Seal	2/per gear set

© PERMCO, INC 10-05